6768

NETWORK WORKING GROUP
Request for Comment 158
NIC 6768

T. C. O'Sullivan
Raytheon
May 19, 1971

This request for comment is being circulated by the TELNET committee to solicit comments, evaulation, and requests for modification of the proposed protocol presented here. Unless comments are received by the writer within two weeks of the date of this RFC, they will not be considered in the preparation of the official TELNET PROTOCOL document.

The proposed document is the result of the work of the committee. It represents a TELNET protocol felt to be adequate for initial implementation.

Readers are referenced to the following previous releases of information:

1. Conventions for Using an IBM 2741 Terminal or a User Console for Access to Network Server HOSTS
   Joel Winett, RFC 110 (NIC #5809)

2. Response to RFD 110
   Wayne Hathaway, RFC 135 (NIC #6712)

3. Level III Server Protocol for the Lincoln Laboratory 360/67 HOST
   Joel Winett, RFC 109 (NIC #5808)

4. First Cut at a Proposed TELNET Protocol
   J. Melvin, D. Watson, RFC 97 (NIC #5740)

5. ASCII Format for Network Interchange
   V. Cerf, RFC 20 (NIC #4722)

6. Discussion of TELNET PROTOCOL
   Tom O'Sullivan, RFC 139 (NIC 6717)
   (Although relevant to the obsoleted RFC 137 (NIC 6714) many of the examples still hold. A replacement discussion document RFC 159 (NIC 6769) will be forthcoming in the near future).

TELNET PROTOCOL

A Proposed Document

T. O'Sullivan for the TELNET Committee

Will Crowther	BBN
Bob Long	SDC
John Melvin	SRI-ARC
Bob Metcalfe	Harvard
Ed Meyer	MAC
Tom O'Sullivan (Chairman)	Raytheon
Joel Winett	MIT-LL

TELNET Protocol

TELNET is a third-level protocol, the function of which is to make a terminal (or process) at a using site appear to the system or a process at a serving site as logically equivalent to a terminal "directly" connected to the serving site. In performing this function, the protocol attempts to minimize the amount of information each HOST must keep about the characteristics of other HOSTS.

Definitions

Protocol Levels (see Figure 1)

Level 1

HOST-IMP protocol specified by BBN in NIC 5735, Specifications for the Interconnection of a HOST and an IMP (BBN Report 1822)

Level 2

HOST-HOST protocol performed by NCPs as described in Document Number 1 (NIC 5413) and subsequent amendments, see RFC 107 (NIC #5806)

One view of the NCP's function is that it takes information from the net and routes it to receiving processes via mechanisms internal to each HOST; conversely, processes use the NCP, via internal system calls, to have information routed to other processes in the net (via the other processes' NCPs).

Level 3 (see Figure 2)

Level 3 is, by definition, the place to which and from which the NCP communicates internally in its own host.

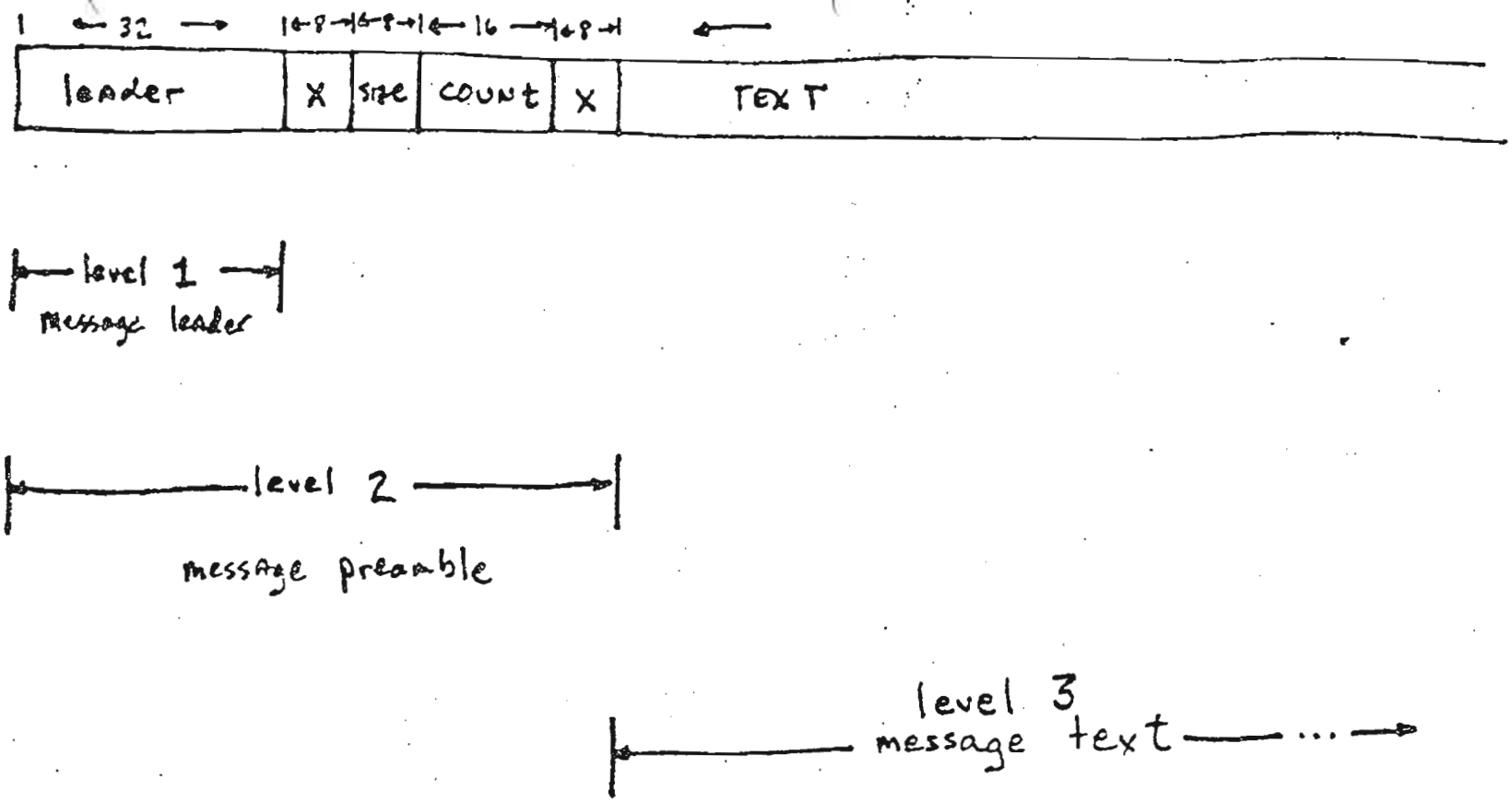

FIGURE 1 NETWORK MESSAGE ON LINK 2-31 INDICATING PORTIONS OF INTEREST TO VARIOUS LEVELS

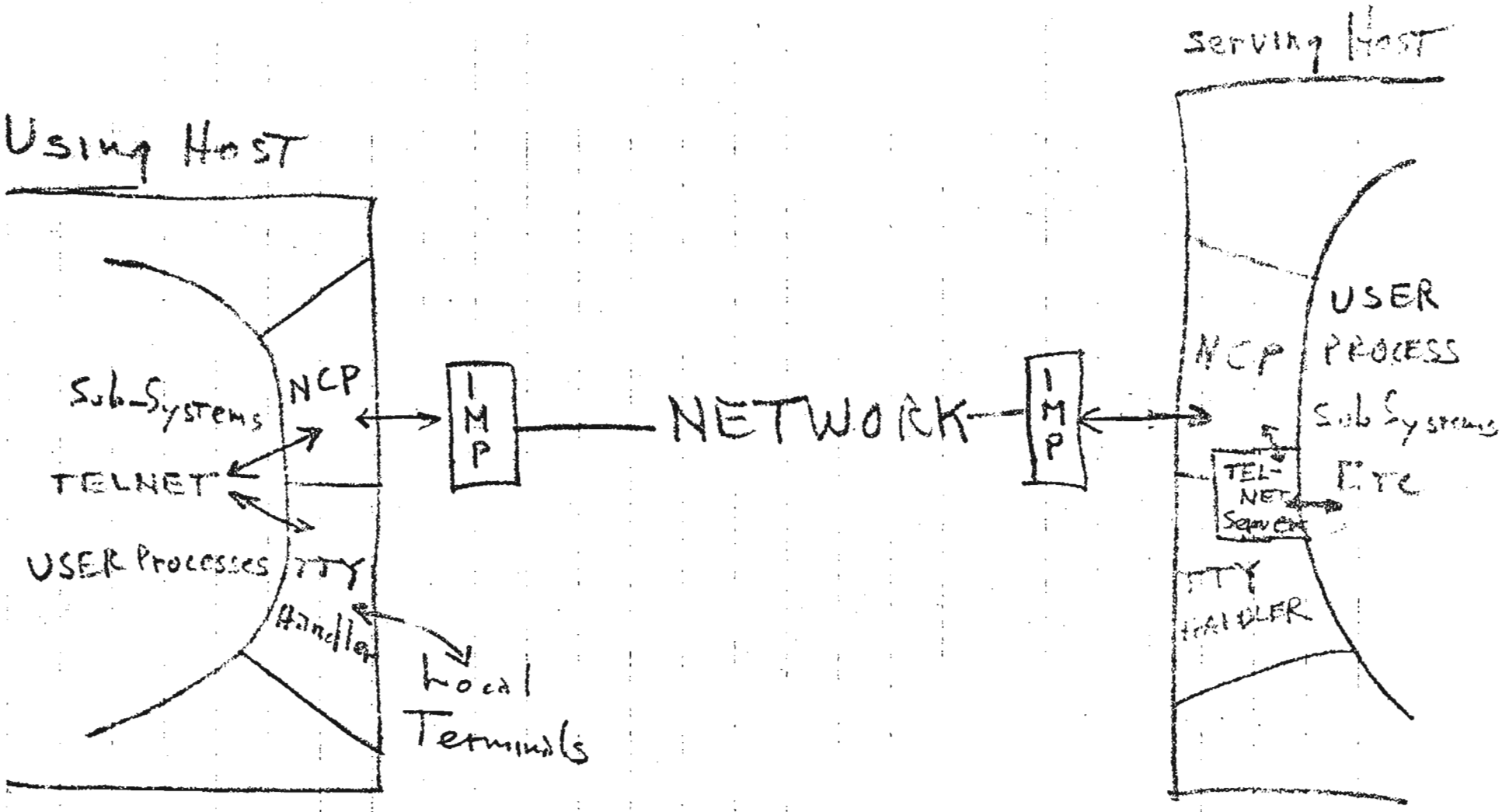

⟷ Telnet Data Path

Figure 2

This level may be equivalent to the user process level in some systems, but this may not be the case in all systems.

In using sites, the TELNET process operates at this level.

In serving sites, the TELNET server operates at this level.

Initial Connection Protocol (ICP)

An agreed-upon sequence of level 3 exchanges between two processes which is, in general, used to synchronize the connection dialogue between the processes, e.g., RFC 80 (NIC #5608) #1, as revised by subsequent information.

Serving Site

The HOST into which the TELNET process is directing the user's keyboard input and from which the TELNET process is receiving control information and data affecting the user's terminal. At the serving site, a TELNET server is executing.

Using Site

The HOST in which the TELNET process is executing.

Sending Site

The HOST transmitting data, could be either using site or serving site.

Receiving Site

Converse of sending site.

User

The person or process "driving" the TELNET process.

In providing services the TELNET protocol will use established network conventions, specifically the Network Control Program, and Initial Connection Protocol referenced in the above definitions, using a byte size of 8 bits on the permanent connection.

The TELNET protocol provides for a Network Virtual Terminal (NVT) through which users may transmit and receive data over connections between the using site and the serving site.

The code of the NVT will be full/7-bit ASCII. The seven-bit code will be transmitted in eight-bit bytes, the high order bit set to zero.

It will be the responsibility of the using site to provide its users with a means of producing all 128 ASCII codes, as well as a selected set of special TELNET control signals (see Figure 3).

The ASCII character ESC will be employed by the user as an escape signal indicating that the next character(s) has special meaning. The meaning assigned to escape code will be serving site defined and therefore may not be consistant across the network.

It will be the responsibility of the serving site to specify for users how the NVT code will be used to represent the codes normally generated by a local terminal. The serving sites specification of this representation is expected, where reasonable, to map on a one-for-one basis for ASCII graphics and controls that are provided through local terminals. The serving site will also specify how the escape conventions will be interpreted by the system.

The end of a line will be represented in the NVT as carriage return (X'OD') followed by line feed. (X'OA')

The protocol assumes that initially the serving site will not provide any echo to the using site.

Each TELNET control signal for which code must be sent over the connection will be represented in the NVT by an eight-bit code, with the high order bit set to one. Following are the special codes established to date. (U) indicates that in most implementations the user would be expected to have the ability to signal the TELNET process from his terminal to initiate the code.

Code X'A0'

Source: Both Sites (U)

MEANING: A DATA TYPE* signal indicating that code will be transmitted by NVT, i.e., using the seven-bit ASCII conventions.

Code X'80'

Source: Using Site (U)

Meaning: Order using site NCP to send an TNS and insert X'80' in data stream

Code X'81'

Source: Using Site (U)

Meaning: Break or Attention, and reverse break.

Code X'82'

Source: Both sites

Meaning: No op

---

* A one-byte DATA TYPE signal is sent as the first byte of data over a connection. A default is employed if the first byte over a connection has the high order bit set to zero, and it is assumed that the seven-bit ASCII NVT convention will be employed. Most implementations and applications may expect the DATA TYPES to be symmetrical at any point in time. (i.e. both using a serving site using the same DATA TYPE.) Other data types for which codes are currently assigned are:

X'A1' Transparency
X'A2' EBCDIC
X'A3' Special String to TELNET (I'll use your code)
X'A4' End Special String to TELNET (I'll use my code)

BITS $b_8 \rightarrow$ $b_7 \rightarrow$ $b_6 \rightarrow$ $b_5 \rightarrow$					0 0 0 0	0 0 0 1	0 0 1 0	0 0 1 1	0 1 0 0	0 1 0 1	0 1 1 0	0 1 1 1	1 0 0 0	1 0 0 1	1 0 1 0	1 0 1 1	1 1 0 0	1 1 0 1	1 1 1 0	1 1 1 1
b_4 ↓	b_3 ↓	b_2 ↓	b_1 ↓	COL → / ROW ↓	0	1	2	3	4	5	6	7	8	9	10	11	12	13	14	15
0	0	0	0	0	NUL	DLE	SP	0	@	P	`	p	'80'		'A0'					
0	0	0	1	1	SOH	DC1	!	1	A	Q	a	q	'81'		'[illegible]'					
0	0	1	0	2	STX	DC2	"	2	B	R	b	r	'82'		'[illegible]'					
0	0	1	1	3	ETX	DC3	#	3	C	S	c	s	'83'		'[illegible]'					
0	1	0	0	4	EOT	DC4	$	4	D	T	d	t	'84'		'[illegible]'					
0	1	0	1	5	ENQ	NAC	%	5	E	U	e	u	'85'							
0	1	1	0	6	ACK	SYN	&	6	F	V	f	v	[illegible]							
0	1	1	1	7	BEL	ETB	'	7	G	W	g	w	[illegible]							
1	0	0	0	8	BS	CAN	(	8	H	X	h	x	[illegible]							
1	0	0	1	9	HT	EM	)	9	I	Y	i	y								
1	0	1	0	10	LF	SUB	*	:	J	Z	j	z								
1	0	1	1	11	VT	ESC	+	;	K	[	k	{								
1	1	0	0	12	FF	FS	,	<	L	\	l	|								
1	1	0	1	13	CR	GS	-	=	M	]	m	}								
1	1	1	0	14	SO	RS	.	>	N	^	n	~								
1	1	1	1	15	SI	US	/	?	O	_	o	DEL								

Code Structure ___ 8 7 6 5 4 3 2 1 ___

'XX' = HEX designation for codes assigned to TELNET Control Signals.

FIGURE 3 Official Network Virtual Terminal Code

Code X'83'

Source: Both Sites

Meaning: Don't Echo

Code X'84'

Source: Both Sites

Meaning: You Echo

Code X'85'

Source: Serving Site

Meaning: Hide your input*

Some special local TELNET control signals are required to permit the user on some systems to send control information to the using site TELNET process**. These do not require a corresponding control code for transmission. The local TELNET control signals are:

1. Transmit all data to this point.

2. Suppress transmission of end of line, send all other data.

* i.e. supress printing of password.

** In some cases, for prolonged periods of special treatment, local implementation may dictate permitting the user to set a "mode" to prevail until explicitly discarded.

Data is to be forwarded to the NCP for transmission as convenient, but at least at the end of line, end of line suppression, and transmit signals. If the normal line length of the sending site is greater than the allocation given by the receiving site, the sending sites NCP, TELNET process, or TELNET server must be prepared to send line segments in convenient lengths until the full line has been sent.

A minimum implementation for TELNET for both using site and serving site follows:

Using Site

1.) Provide User (human or process) with ability to cause all 128 ASCII codes to be transmitted in the required 8 bit field to the serving site.

2.) Ignore (and strip) all TELNET control characters received from the serving site.

3.) Provide echo or local print capability to local user terminals.

4.) Provide for CR-LF end of line convention.

5.) Implement local TELNET controls (See discussion above of local TELNET control signals) for transmit or suppress end of line.

Serving Site

1.) Provide (and announce) one for one mapping between ASCII and Serving Site character and control set (or if Serving Site set greater than 128, a sub set.)

2.) Ignore (and strip) all TELNET control characters received from the Using Site.

3.) Assume Using Site will provide local terminal echo or print capability.

4.) Provide for CR-LF end of line convention.

This document will be revised as necessary to provide conventions for data types in addition to the NVT ASCII type.