Network Working Group
Request for Comments: 4601
Obsoletes: 2362
Category: Standards Track

B. Fenner
AT&T Labs - Research
M. Handley
UCL
H. Holbrook
Arastra
I. Kouvelas
Cisco

August 2006

Protocol Independent Multicast - Sparse Mode (PIM-SM): Protocol Specification (Revised)

Status of This Memo

This document specifies an Internet standards track protocol for the Internet community, and requests discussion and suggestions for improvements. Please refer to the current edition of the "Internet Official Protocol Standards" (STD 1) for the standardization state and status of this protocol. Distribution of this memo is unlimited.

Copyright Notice

Copyright (C) The Internet Society (2006).

Abstract

This document specifies Protocol Independent Multicast - Sparse Mode (PIM-SM). PIM-SM is a multicast routing protocol that can use the underlying unicast routing information base or a separate multicast-capable routing information base. It builds unidirectional shared trees rooted at a Rendezvous Point (RP) per group, and optionally creates shortest-path trees per source.

This document obsoletes RFC 2362, an Experimental version of PIM-SM.

Table of Contents

1. Introduction . . . 4
2. Terminology . . . 4
   2.1. Definitions . . . 4
   2.2. Pseudocode Notation . . . 5
3. PIM-SM Protocol Overview . . . 5
   3.1. Phase One: RP Tree . . . 6
   3.2. Phase Two: Register-Stop . . . 6
   3.3. Phase Three: Shortest-Path Tree . . . 7
   3.4. Source-Specific Joins . . . 7
   3.5. Source-Specific Prunes . . . 8
   3.6. Multi-Access Transit LANs . . . 8
   3.7. RP Discovery . . . 8
4. Protocol Specification . . . 9
   4.1. PIM Protocol State . . . 9
      4.1.1. General Purpose State . . . 10
      4.1.2. (*,*,RP) State . . . 10
      4.1.3. (*,G) State . . . 11
      4.1.4. (S,G) State . . . 12
      4.1.5. (S,G,rpt) State . . . 13
      4.1.6. State Summarization Macros . . . 14
   4.2. Data Packet Forwarding Rules . . . 18
      4.2.1. Last-Hop Switchover to the SPT . . . 20
      4.2.2. Setting and Clearing the (S,G) SPTbit . . . 20
      4.3.1. Designated Routers (DR) and Hello Messages . . . 21
      4.3.1. Sending Hello Messages . . . 21
      4.3.2. DR Election . . . 23
      4.3.3. Reducing Prune Propagation Delay on LANs . . . 24
      4.3.4. Maintaining Secondary Address Lists . . . 26
   4.4. PIM Register Messages . . . 27
      4.4.1. Sending Register Messages from the DR . . . 28
      4.4.2. Receiving Register Messages at the RP . . . 32
   4.5. PIM Join/Prune Messages . . . 33
      4.5.1. Receiving (*,*,RP) Join/Prune Messages . . . 34
      4.5.2. Receiving (*,G) Join/Prune Messages . . . 36
      4.5.3. Receiving (S,G) Join/Prune Messages . . . 39
      4.5.4. Receiving (S,G,rpt) Join/Prune Messages . . . 42
      4.5.5. Sending (*,*,RP) Join/Prune Messages . . . 47
      4.5.6. Sending (*,G) Join/Prune Messages . . . 50
      4.5.7. Sending (S,G) Join/Prune Messages . . . 53
      4.5.8. (S,G,rpt) Periodic Messages . . . 57
      4.5.9. State Machine for (S,G,rpt) Triggered Messages . . . 58
      4.5.10. Background: (*,*,RP) and (S,G,rpt) Interaction . . . 62
   4.6. PIM Assert Messages . . . 63
      4.6.1. (S,G) Assert Message State Machine . . . 63
      4.6.2. (*,G) Assert Message State Machine . . . 69
      4.6.3. Assert Metrics . . . 74
      4.6.4. AssertCancel Messages . . . 75
      4.6.5. Assert State Macros . . . 76
   4.7. PIM Bootstrap and RP Discovery . . . 78
      4.7.1. Group-to-RP Mapping . . . 79

4.7.2. Hash Function 79
4.8. Source-Specific Multicast 80
4.8.1. Protocol Modifications for SSM Destination Addresses 80
4.8.2. PIM-SSM-Only Routers 81
4.9. PIM Packet Formats 82
4.9.1. Encoded Source and Group Address Formats 83
4.9.2. Hello Message Format 85
4.9.3. Register Message Format 88
4.9.4. Register-Stop Message Format 90
4.9.5. Join/Prune Message Format. 90
4.9.5.1. Group Set Source List Rules 93
4.9.5.2. Group Set Fragmentation 95
4.9.6. Assert Message Format 96
4.10. PIM Timers 97
4.11. Timer Values 98
5. IANA Considerations 101
5.1. PIM Address Family 101
5.2. PIM Hello Options 101
6. Security Considerations 101
6.1. Attacks Based on Forged Messages 102
6.1.1. Forged Link-Local Messages 102
6.1.2. Forged Unicast Messages 102
6.2. Non-Cryptographic Authentication Mechanisms 102
6.3. Authentication Using IPsec 103
6.3.1. Protecting Link-Local Multicast Messages 103
6.3.2. Protecting Unicast Messages 103
6.3.2.1. Register Messages 103
6.3.2.2. Register-Stop Messages 104
6.4. Denial-of-Service Attacks 104
7. Acknowledgements 104
8. Normative References 105
9. Informative References 105
10. Appendix A: PIM Multicast Border Router Behavior 106
10.1. Sources External to the PIM-SM Domain 106
10.2. Sources Internal to the PIM-SM Domain 106
11. Index 108

List of Figures

Figure 1. Per-(S,G) register state machine at a DR 28
Figure 2. Downstream per-interface (*,*,RP) state machine 34
Figure 3. Downstream per-interface (*,G) state machine 37
Figure 4. Downstream per-interface (S,G) state machine 40
Figure 5. Downstream per-interface (S,G,rpt) state machine 43
Figure 6. Upstream (*,*,RP) state machine 47
Figure 7. Upstream (*,G) state machine 50
Figure 8. Upstream (S,G) state machine 54
Figure 9. Upstream (S,G,rpt) state machine for triggered messages 58
Figure 10. Per-interface (S,G) Assert State machine 63
Figure 11. Per-interface (*,G) Assert State machine 70

1. Introduction

This document specifies a protocol for efficiently routing multicast groups that may span wide-area (and inter-domain) internets. This protocol is called Protocol Independent Multicast - Sparse Mode (PIM-SM) because, although it may use the underlying unicast routing to provide reverse-path information for multicast tree building, it is not dependent on any particular unicast routing protocol.

PIM-SM version 2 was originally specified in RFC 2117 and was revised in RFC 2362, both Experimental RFCs. This document is intended to obsolete RFC 2362, to correct a number of deficiencies that have been identified with the way PIM-SM was previously specified, and to bring PIM-SM onto the IETF Standards Track. As far as possible, this document specifies the same protocol as RFC 2362 and only diverges from the behavior intended by RFC 2362 when the previously specified behavior was clearly incorrect. Routers implemented according to the specification in this document will be able to interoperate successfully with routers implemented according to RFC 2362.

2. Terminology

In this document, the key words "MUST", "MUST NOT", "REQUIRED", "SHALL", "SHALL NOT", "SHOULD", "SHOULD NOT", "RECOMMENDED", "MAY", and "OPTIONAL" are to be interpreted as described in RFC 2119 [1] and indicate requirement levels for compliant PIM-SM implementations.

2.1. Definitions

The following terms have special significance for PIM-SM:

Rendezvous Point (RP):
: An RP is a router that has been configured to be used as the root of the non-source-specific distribution tree for a multicast group. Join messages from receivers for a group are sent towards the RP, and data from senders is sent to the RP so that receivers can discover who the senders are and start to receive traffic destined for the group.

Designated Router (DR):
: A shared-media LAN like Ethernet may have multiple PIM-SM routers connected to it. A single one of these routers, the DR, will act on behalf of directly connected hosts with respect to the PIM-SM protocol. A single DR is elected per interface (LAN or otherwise) using a simple election process.

MRIB
: Multicast Routing Information Base. This is the multicast topology table, which is typically derived from the unicast routing table, or routing protocols such as Multiprotocol BGP (MBGP) that carry multicast-specific topology information. In PIM-SM, the MRIB is used to decide where to send Join/Prune messages. A secondary function of the MRIB is to provide routing metrics for destination addresses; these metrics are used when sending and processing Assert messages.

RPF Neighbor
: RPF stands for "Reverse Path Forwarding". The RPF Neighbor of a router with respect to an address is the neighbor that the MRIB indicates should be used to forward packets to that address. In the case of a PIM-SM multicast group, the RPF neighbor is the router that a Join message for that group would be directed to, in the absence of modifying Assert state.

TIB Tree Information Base. This is the collection of state at a PIM router that has been created by receiving PIM Join/Prune messages, PIM Assert messages, and Internet Group Management Protocol (IGMP) or Multicast Listener Discovery (MLD) information from local hosts. It essentially stores the state of all multicast distribution trees at that router.

MFIB Multicast Forwarding Information Base. The TIB holds all the state that is necessary to forward multicast packets at a router. However, although this specification defines forwarding in terms of the TIB, to actually forward packets using the TIB is very inefficient. Instead, a real router implementation will normally build an efficient MFIB from the TIB state to perform forwarding. How this is done is implementation-specific and is not discussed in this document.

Upstream
Towards the root of the tree. The root of tree may be either the source or the RP, depending on the context.

Downstream
Away from the root of the tree.

GenID
Generation Identifier, used to detect reboots.

PMBR
PIM Multicast Border Router, joining a PIM domain with another multicast domain.

2.2. Pseudocode Notation

We use set notation in several places in this specification.

`A ⊕ B` is the union of two sets, A and B.

`A ⊖ B` is the elements of set A that are not in set B.

`NULL` is the empty set or list.

In addition, we use C-like syntax:

= denotes assignment of a variable.

== denotes a comparison for equality.

≠ denotes a comparison for inequality.

Braces { and } are used for grouping.

3. PIM-SM Protocol Overview

This section provides an overview of PIM-SM behavior. It is intended as an introduction to how PIM-SM works, and it is **NOT** definitive. For the definitive specification, see Section 4.

PIM relies on an underlying topology-gathering protocol to populate a routing table with routes. This routing table is called the Multicast Routing Information Base (MRIB). The routes in this table may be taken directly from the unicast routing table, or they may be different and provided by a separate routing protocol such as MBGP [10]. Regardless of how it is created, the primary role of the MRIB in the PIM protocol is to provide the next-hop router along a multicast-capable path to each destination subnet. The MRIB is used to determine the next-hop neighbor to which any PIM Join/Prune message is sent. Data flows along the reverse path of the Join messages. Thus, in contrast to the unicast RIB, which specifies the next hop that a data packet would take to get *to* some subnet, the MRIB gives

reverse-path information and indicates the path that a multicast data packet would take *from* its origin subnet to the router that has the MRIB.

Like all multicast routing protocols that implement the service model from RFC 1112 [3], PIM-SM must be able to route data packets from sources to receivers without either the sources or receivers knowing a priori of the existence of the others. This is essentially done in three phases, although as senders and receivers may come and go at any time, all three phases may occur simultaneously.

3.1. Phase One: RP Tree

In phase one, a multicast receiver expresses its interest in receiving traffic destined for a multicast group. Typically, it does this using IGMP [2] or MLD [4], but other mechanisms might also serve this purpose. One of the receiver's local routers is elected as the Designated Router (DR) for that subnet. On receiving the receiver's expression of interest, the DR then sends a PIM Join message towards the RP for that multicast group. This Join message is known as a (*,G) Join because it joins group G for all sources to that group. The (*,G) Join travels hop-by-hop towards the RP for the group, and in each router it passes through, multicast tree state for group G is instantiated. Eventually, the (*,G) Join either reaches the RP or reaches a router that already has (*,G) Join state for that group. When many receivers join the group, their Join messages converge on the RP and form a distribution tree for group G that is rooted at the RP. This is known as the RP Tree (RPT), and is also known as the shared tree because it is shared by all sources sending to that group. Join messages are resent periodically so long as the receiver remains in the group. When all receivers on a leaf-network leave the group, the DR will send a PIM (*,G) Prune message towards the RP for that multicast group. However, if the Prune message is not sent for any reason, the state will eventually time out.

A multicast data sender just starts sending data destined for a multicast group. The sender's local router (DR) takes those data packets, unicast-encapsulates them, and sends them directly to the RP. The RP receives these encapsulated data packets, decapsulates them, and forwards them onto the shared tree. The packets then follow the (*,G) multicast tree state in the routers on the RP Tree, being replicated wherever the RP Tree branches, and eventually reaching all the receivers for that multicast group. The process of encapsulating data packets to the RP is called registering, and the encapsulation packets are known as PIM Register packets.

At the end of phase one, multicast traffic is flowing encapsulated to the RP, and then natively over the RP tree to the multicast receivers.

3.2. Phase Two: Register-Stop

Register-encapsulation of data packets is inefficient for two reasons:

- Encapsulation and decapsulation may be relatively expensive operations for a router to perform, depending on whether or not the router has appropriate hardware for these tasks.
- Traveling all the way to the RP, and then back down the shared tree may result in the packets traveling a relatively long distance to reach receivers that are close to the sender. For some applications, this increased latency or bandwidth consumption is undesirable.

Although Register-encapsulation may continue indefinitely, for these reasons, the RP will normally choose to switch to native forwarding. To do this, when the RP receives a register-encapsulated data packet from source S on group G, it will normally initiate an (S,G) source-specific Join towards S. This Join message travels hop-by-hop towards S, instantiating (S,G) multicast tree state in the routers along the path. (S,G) multicast tree

state is used only to forward packets for group G if those packets come from source S. Eventually the Join message reaches S's subnet or a router that already has (S,G) multicast tree state, and then packets from S start to flow following the (S,G) tree state towards the RP. These data packets may also reach routers with (*,G) state along the path towards the RP; if they do, they can shortcut onto the RP tree at this point.

While the RP is in the process of joining the source-specific tree for S, the data packets will continue being encapsulated to the RP. When packets from S also start to arrive natively at the RP, the RP will be receiving two copies of each of these packets. At this point, the RP starts to discard the encapsulated copy of these packets, and it sends a Register-Stop message back to S's DR to prevent the DR from unnecessarily encapsulating the packets.

At the end of phase 2, traffic will be flowing natively from S along a source-specific tree to the RP, and from there along the shared tree to the receivers. Where the two trees intersect, traffic may transfer from the source-specific tree to the RP tree and thus avoid taking a long detour via the RP.

Note that a sender may start sending before or after a receiver joins the group, and thus phase two may happen before the shared tree to the receiver is built.

3.3. Phase Three: Shortest-Path Tree

Although having the RP join back towards the source removes the encapsulation overhead, it does not completely optimize the forwarding paths. For many receivers, the route via the RP may involve a significant detour when compared with the shortest path from the source to the receiver.

To obtain lower latencies or more efficient bandwidth utilization, a router on the receiver's LAN, typically the DR, may optionally initiate a transfer from the shared tree to a source-specific shortest-path tree (SPT). To do this, it issues an (S,G) Join towards S. This instantiates state in the routers along the path to S. Eventually, this join either reaches S's subnet or reaches a router that already has (S,G) state. When this happens, data packets from S start to flow following the (S,G) state until they reach the receiver.

At this point, the receiver (or a router upstream of the receiver) will be receiving two copies of the data: one from the SPT and one from the RPT. When the first traffic starts to arrive from the SPT, the DR or upstream router starts to drop the packets for G from S that arrive via the RP tree. In addition, it sends an (S,G) Prune message towards the RP. This is known as an (S,G,rpt) Prune. The Prune message travels hop-by-hop, instantiating state along the path towards the RP indicating that traffic from S for G should NOT be forwarded in this direction. The prune is propagated until it reaches the RP or a router that still needs the traffic from S for other receivers.

By now, the receiver will be receiving traffic from S along the shortest-path tree between the receiver and S. In addition, the RP is receiving the traffic from S, but this traffic is no longer reaching the receiver along the RP tree. As far as the receiver is concerned, this is the final distribution tree.

3.4. Source-Specific Joins

IGMPv3 permits a receiver to join a group and specify that it only wants to receive traffic for a group if that traffic comes from a particular source. If a receiver does this, and no other receiver on the LAN requires all the traffic for the group, then the DR may omit performing a (*,G) join to set up the shared tree, and instead issue a source-specific (S,G) join only.

The range of multicast addresses from 232.0.0.0 to 232.255.255.255 is currently set aside for source-specific multicast in IPv4. For groups in this range, receivers should only issue source-specific IGMPv3 joins. If a PIM router receives a non-source-specific join for a group in this range, it should ignore it, as described in Section 4.8.

3.5. Source-Specific Prunes

IGMPv3 also permits a receiver to join a group and to specify that it only wants to receive traffic for a group if that traffic *does not* come from a specific source or sources. In this case, the DR will perform a (*,G) join as normal, but may combine this with an (S,G,rpt) prune for each of the sources the receiver does not wish to receive.

3.6. Multi-Access Transit LANs

The overview so far has concerned itself with point-to-point transit links. However, using multi-access LANs such as Ethernet for transit is not uncommon. This can cause complications for three reasons:

- Two or more routers on the LAN may issue (*,G) Joins to different upstream routers on the LAN because they have inconsistent MRIB entries regarding how to reach the RP. Both paths on the RP tree will be set up, causing two copies of all the shared tree traffic to appear on the LAN.
- Two or more routers on the LAN may issue (S,G) Joins to different upstream routers on the LAN because they have inconsistent MRIB entries regarding how to reach source S. Both paths on the source-specific tree will be set up, causing two copies of all the traffic from S to appear on the LAN.
- A router on the LAN may issue a (*,G) Join to one upstream router on the LAN, and another router on the LAN may issue an (S,G) Join to a different upstream router on the same LAN. Traffic from S may reach the LAN over both the RPT and the SPT. If the receiver behind the downstream (*,G) router doesn't issue an (S,G,rpt) prune, then this condition would persist.

All of these problems are caused by there being more than one upstream router with join state for the group or source-group pair. PIM does not prevent such duplicate joins from occurring; instead, when duplicate data packets appear on the LAN from different routers, these routers notice this and then elect a single forwarder. This election is performed using PIM Assert messages, which resolve the problem in favor of the upstream router that has (S,G) state; or, if neither or both router has (S,G) state, then the problem is resolved in favor of the router with the best metric to the RP for RP trees, or the best metric to the source to source-specific trees.

These Assert messages are also received by the downstream routers on the LAN, and these cause subsequent Join messages to be sent to the upstream router that won the Assert.

3.7. RP Discovery

PIM-SM routers need to know the address of the RP for each group for which they have (*,G) state. This address is obtained automatically (e.g., embedded-RP), through a bootstrap mechanism, or through static configuration.

One dynamic way to do this is to use the Bootstrap Router (BSR) mechanism [11]. One router in each PIM domain is elected the Bootstrap Router through a simple election process. All the routers in the domain that are configured to be candidates to be RPs periodically unicast their candidacy to the BSR. From the candidates, the BSR picks an RP-

set, and periodically announces this set in a Bootstrap message. Bootstrap messages are flooded hop-by-hop throughout the domain until all routers in the domain know the RP-Set.

To map a group to an RP, a router hashes the group address into the RP-set using an order-preserving hash function (one that minimizes changes if the RP-Set changes). The resulting RP is the one that it uses as the RP for that group.

4. Protocol Specification

The specification of PIM-SM is broken into several parts:

- Section 4.1 details the protocol state stored.
- Section 4.2 specifies the data packet forwarding rules.
- Section 4.3 specifies Designated Router (DR) election and the rules for sending and processing Hello messages.
- Section 4.4 specifies the PIM Register generation and processing rules.
- Section 4.5 specifies the PIM Join/Prune generation and processing rules.
- Section 4.6 specifies the PIM Assert generation and processing rules.
- Section 4.7 specifies the RP discovery mechanisms.
- The subset of PIM required to support Source-Specific Multicast, PIM-SSM, is described in Section 4.8.
- PIM packet formats are specified in Section 4.9.
- A summary of PIM-SM timers and their default values is given in Section 4.10.
- Appendix A in Section 10 specifies the PIM Multicast Border Router behavior.

4.1. PIM Protocol State

This section specifies all the protocol state that a PIM implementation should maintain in order to function correctly. We term this state the *Tree Information Base* (TIB), as it holds the state of all the multicast distribution trees at this router. In this specification, we define PIM mechanisms in terms of the TIB. However, only a very simple implementation would actually implement packet forwarding operations in terms of this state. Most implementations will use this state to build a multicast forwarding table, which would then be updated when the relevant state in the TIB changes.

Although we specify precisely the state to be kept, this does not mean that an implementation of PIM-SM needs to hold the state in this form. This is actually an abstract state definition, which is needed in order to specify the router's behavior. A PIM-SM implementation is free to hold whatever internal state it requires and will still be conformant with this specification so long as it results in the same externally visible protocol behavior as an abstract router that holds the following state.

We divide TIB state into four sections:

(*,*,RP) state
: State that maintains per-RP trees, for all groups served by a given RP.

(*,G) state
: State that maintains the RP tree for G.

(S,G) state
: State that maintains a source-specific tree for source S and group G.

(S,G,rpt) state
: State that maintains source-specific information about source S on the RP tree for G.

For example, if a source is being received on the source-specific tree, it will normally have been pruned off the RP tree. This prune state is (S,G,rpt) state.

The state that should be kept is described below. Of course, implementations will only maintain state when it is relevant to forwarding operations; for example, the "NoInfo" state might be assumed from the lack of other state information rather than being held explicitly.

4.1.1. General Purpose State

A router holds the following non-group-specific state:

For each interface:

- Effective Override Interval
- Effective Propagation Delay
- Suppression state: One of {"Enable", "Disable"}

Neighbor State:

For each neighbor:

- Information from neighbor's Hello
- Neighbor's GenID.
- Neighbor Liveness Timer (NLT)

Designated Router (DR) State:

- Designated Router's IP Address
- DR's DR Priority

The Effective Override Interval, the Effective Propagation Delay and the Interface suppression state are described in Section 4.3.3. Designated Router state is described in Section 4.3.

4.1.2. (*,*,RP) State

For every RP, a router keeps the following state:

(*,*,RP) state:

For each interface:

PIM (*,*,RP) Join/Prune State:

- State: One of {"NoInfo" (NI), "Join" (J), "Prune-Pending" (PP)}
- Prune-Pending Timer (PPT)
- Join/Prune Expiry Timer (ET)

Not interface specific:

Upstream (*,*,RP) Join/Prune State:

- State: One of {"NotJoined(*,*,RP)", "Joined(*,*,RP)"}
- Upstream Join/Prune Timer (JT)
- Last RPF Neighbor towards RP that was used

PIM (*,*,RP) Join/Prune state is the result of receiving PIM (*,*,RP) Join/Prune messages on this interface and is specified in Section 4.5.1.

The upstream (*,*,RP) Join/Prune State reflects the state of the upstream (*,*,RP) state machine described in Section 4.5.5.

The upstream (*,*,RP) Join/Prune Timer is used to send out periodic Join(*,*,RP) messages, and to override Prune(*,*,RP) messages from peers on an upstream LAN interface.

The last RPF neighbor towards the RP is stored because if the MRIB changes, then the RPF neighbor towards the RP may change. If it does so, then we need to trigger a new Join(*,*,RP) to the new upstream neighbor and a Prune(*,*,RP) to the old upstream neighbor. Similarly, if a router detects through a changed GenID in a Hello message that the upstream neighbor towards the RP has rebooted, then it should re-instantiate state by sending a Join(*,*,RP). These mechanisms are specified in Section 4.5.5.

4.1.3. (*,G) State

For every group G, a router keeps the following state:

(*,G) state:

For each interface:

Local Membership:

State: One of {"NoInfo", "Include"}

PIM (*,G) Join/Prune State:

- State: One of {"NoInfo" (NI), "Join" (J), "Prune-Pending" (PP)}
- Prune-Pending Timer (PPT)
- Join/Prune Expiry Timer (ET)

(*,G) Assert Winner State

- State: One of {"NoInfo" (NI), "I lost Assert" (L), "I won Assert" (W)}
- Assert Timer (AT)
- Assert winner's IP Address (AssertWinner)
- Assert winner's Assert Metric (AssertWinnerMetric)

Not interface specific:

Upstream (*,G) Join/Prune State:

- State: One of {"NotJoined(*,G)", "Joined(*,G)"}
- Upstream Join/Prune Timer (JT)
- Last RP Used
- Last RPF Neighbor towards RP that was used

Local membership is the result of the local membership mechanism (such as IGMP or MLD) running on that interface. It need not be kept if this router is not the DR on that interface unless this router won a (*,G) assert on this interface for this group, although implementations may optionally keep this state in case they become the DR or assert winner. We recommend storing this information if possible, as it reduces latency converging to stable operating conditions after a failure causing a change of DR. This information is used by the `pim_include(*,G)` macro described in Section 4.1.6.

PIM (*,G) Join/Prune state is the result of receiving PIM (*,G) Join/Prune messages on this interface and is specified in Section 4.5.2. The state is used by the macros that calculate the outgoing interface list in Section 4.1.6, and in the `JoinDesired(*,G)` macro (defined in Section 4.5.6) that is used in deciding whether a Join(*,G) should be sent upstream.

(*,G) Assert Winner state is the result of sending or receiving (*,G) Assert messages on this interface. It is specified in Section 4.6.2.

The upstream (*,G) Join/Prune State reflects the state of the upstream (*,G) state machine described in Section 4.5.6.

The upstream (*,G) Join/Prune Timer is used to send out periodic Join(*,G) messages, and to override Prune(*,G) messages from peers on an upstream LAN interface.

The last RP used must be stored because if the RP-Set changes (Section 4.7), then state must be torn down and rebuilt for groups whose RP changes.

The last RPF neighbor towards the RP is stored because if the MRIB changes, then the RPF neighbor towards the RP may change. If it does so, then we need to trigger a new Join(*,G) to the new upstream neighbor and a Prune(*,G) to the old upstream neighbor. Similarly, if a router detects through a changed GenID in a Hello message that the upstream neighbor towards the RP has rebooted, then it should re-instantiate state by sending a Join(*,G). These mechanisms are specified in Section 4.5.6.

4.1.4. (S,G) State

For every source/group pair (S,G), a router keeps the following state:

(S,G) state:

For each interface:

Local Membership:

State: One of {"NoInfo", "Include"}

PIM (S,G) Join/Prune State:

- State: One of {"NoInfo" (NI), "Join" (J), "Prune-Pending" (PP)}
- Prune-Pending Timer (PPT)
- Join/Prune Expiry Timer (ET)

(S,G) Assert Winner State

- State: One of {"NoInfo" (NI), "I lost Assert" (L), "I won Assert" (W)}
- Assert Timer (AT)
- Assert winner's IP Address (AssertWinner)
- Assert winner's Assert Metric (AssertWinnerMetric)

Not interface specific:

Upstream (S,G) Join/Prune State:

- State: One of {"NotJoined(S,G)", "Joined(S,G)"}

- Upstream (S,G) Join/Prune Timer (JT)
- Last RPF Neighbor towards S that was used
- SPTbit (indicates (S,G) state is active)
- (S,G) Keepalive Timer (KAT)

Additional (S,G) state at the DR:

- Register state: One of {"Join" (J), "Prune" (P), "Join-Pending" (JP), "NoInfo" (NI)}
- Register-Stop timer

Additional (S,G) state at the RP:

- PMBR: the first PMBR to send a Register for this source with the Border bit set.

Local membership is the result of the local source-specific membership mechanism (such as IGMP version 3) running on that interface and specifying that this particular source should be included. As stored here, this state is the resulting state after any IGMPv3 inconsistencies have been resolved. It need not be kept if this router is not the DR on that interface unless this router won a (S,G) assert on this interface for this group. However, we recommend storing this information if possible, as it reduces latency converging to stable operating conditions after a failure causing a change of DR. This information is used by the `pim_include(S,G)` macro described in Section 4.1.6.

PIM (S,G) Join/Prune state is the result of receiving PIM (S,G) Join/Prune messages on this interface and is specified in Section 4.5.2. The state is used by the macros that calculate the outgoing interface list in Section 4.1.6, and in the `JoinDesired(S,G)` macro (defined in Section 4.5.7) that is used in deciding whether a Join(S,G) should be sent upstream.

(S,G) Assert Winner state is the result of sending or receiving (S,G) Assert messages on this interface. It is specified in Section 4.6.1.

The upstream (S,G) Join/Prune State reflects the state of the upstream (S,G) state machine described in Section 4.5.7.

The upstream (S,G) Join/Prune Timer is used to send out periodic Join(S,G) messages, and to override Prune(S,G) messages from peers on an upstream LAN interface.

The last RPF neighbor towards S is stored because if the MRIB changes, then the RPF neighbor towards S may change. If it does so, then we need to trigger a new Join(S,G) to the new upstream neighbor and a Prune(S,G) to the old upstream neighbor. Similarly, if the router detects through a changed GenID in a Hello message that the upstream neighbor towards S has rebooted, then it should re-instantiate state by sending a Join(S,G). These mechanisms are specified in Section 4.5.7.

The SPTbit is used to indicate whether forwarding is taking place on the (S,G) Shortest Path Tree (SPT) or on the (*,G) tree. A router can have (S,G) state and still be forwarding on (*,G) state during the interval when the source-specific tree is being constructed. When SPTbit is FALSE, only (*,G) forwarding state is used to forward packets from S to G. When SPTbit is TRUE, both (*,G) and (S,G) forwarding state are used.

The (S,G) Keepalive Timer is updated by data being forwarded using this (S,G) forwarding state. It is used to keep (S,G) state alive in the absence of explicit (S,G) Joins. Amongst other things, this is necessary for the so-called "turnaround rules" — when the RP uses (S,G) joins to stop encapsulation, and then (S,G) prunes to prevent traffic from unnecessarily reaching the RP.

On a DR, the (S,G) Register State is used to keep track of whether to encapsulate data to the RP on the Register Tunnel; the (S,G) Register-Stop timer tracks how long before encapsulation begins again for a given (S,G).

On an RP, the PMBR value must be cleared when the Keepalive Timer expires.

4.1.5. (S,G,rpt) State

For every source/group pair (S,G) for which a router also has (*,G) state, it also keeps the following state:

(S,G,rpt) state:

For each interface:

Local Membership:

State: One of {"NoInfo", "Exclude"}

PIM (S,G,rpt) Join/Prune State:

- State: One of {"NoInfo", "Pruned", "Prune-Pending"}
- Prune-Pending Timer (PPT)
- Join/Prune Expiry Timer (ET)

Not interface specific:

Upstream (S,G,rpt) Join/Prune State:

- State: One of {"RPTNotJoined(G)", "NotPruned(S,G,rpt)", "Pruned(S,G,rpt)"}
- Override Timer (OT)

Local membership is the result of the local source-specific membership mechanism (such as IGMPv3) running on that interface and specifying that although there is (*,G) Include state, this particular source should be excluded. As stored here, this state is the resulting state after any IGMPv3 inconsistencies between LAN members have been resolved. It need not be kept if this router is not the DR on that interface unless this router won a (*,G) assert on this interface for this group. However, we recommend storing this information if possible, as it reduces latency converging to stable operating conditions after a failure causing a change of DR. This information is used by the `pim_exclude(S,G)` macro described in Section 4.1.6.

PIM (S,G,rpt) Join/Prune state is the result of receiving PIM (S,G,rpt) Join/Prune messages on this interface and is specified in Section 4.5.4. The state is used by the macros that calculate the outgoing interface list in Section 4.1.6, and in the rules for adding Prune(S,G,rpt) messages to Join(*,G) messages specified in Section 4.5.8.

The upstream (S,G,rpt) Join/Prune state is used along with the Override Timer to send the correct override messages in response to Join/Prune messages sent by upstream peers on a LAN. This state and behavior are specified in Section 4.5.9.

4.1.6. State Summarization Macros

Using this state, we define the following "macro" definitions, which we will use in the descriptions of the state machines and pseudocode in the following sections.

The most important macros are those that define the outgoing interface list (or "olist") for the relevant state. An olist can be "immediate" if it is built directly from the state of the relevant type. For example, the immediate_olist(S,G) is the olist that would be built if the router only had (S,G) state and no (*,G) or (S,G,rpt) state. In contrast, the "inherited" olist inherits state from other types. For example, the inherited_olist(S,G) is the olist that is relevant for forwarding a packet from S to G using both source-specific and group-specific state.

There is no immediate_olist(S,G,rpt) as (S,G,rpt) state is negative state; it removes interfaces in the (*,G) olist from the olist that is actually used to forward traffic. The inherited_olist(S,G,rpt) is therefore the olist that would be used for a packet from S to G forwarding on the RP tree. It is a strict subset of (immediate_olist(*,*,RP) $\oplus$ immediate_olist(*,G)).

Generally speaking, the inherited olists are used for forwarding, and the immediate_olists are used to make decisions about state maintenance.

```
immediate_olist(*,*,RP) =
    joins(*,*,RP)

immediate_olist(*,G) =
    joins(*,G) ⊕ pim_include(*,G) ⊖ lost_assert(*,G)

immediate_olist(S,G) =
    joins(S,G) ⊕ pim_include(S,G) ⊖ lost_assert(S,G)

inherited_olist(S,G,rpt) =
        ( joins(*,*,RP(G)) ⊕ joins(*,G) ⊖ prunes(S,G,rpt) )
    ⊕ ( pim_include(*,G) ⊖ pim_exclude(S,G))
    ⊖ ( lost_assert(*,G) ⊕ lost_assert(S,G,rpt) )

inherited_olist(S,G) =
    inherited_olist(S,G,rpt) ⊕
    joins(S,G) ⊕ pim_include(S,G) ⊖ lost_assert(S,G)
```

The macros pim_include(*,G) and pim_include(S,G) indicate the interfaces to which traffic might be forwarded because of hosts that are local members on that interface. Note that normally only the DR cares about local membership, but when an assert happens, the assert winner takes over responsibility for forwarding traffic to local members that have requested traffic on a group or source/group pair.

```
 pim_include(*,G) =
   { all interfaces I such that:
     ( ( I_am_DR( I ) AND lost_assert(*,G,I) == FALSE )
       OR AssertWinner(*,G,I) == me )
     AND  local_receiver_include(*,G,I) }

pim_include(S,G) =
    { all interfaces I such that:
      ( (I_am_DR( I ) AND lost_assert(S,G,I) == FALSE )
        OR AssertWinner(S,G,I) == me )
       AND  local_receiver_include(S,G,I) }

pim_exclude(S,G) =
    { all interfaces I such that:
      ( (I_am_DR( I ) AND lost_assert(*,G,I) == FALSE )
        OR AssertWinner(*,G,I) == me )
       AND  local_receiver_exclude(S,G,I) }
```

The clause "local_receiver_include(S,G,I)" is true if the IGMP/MLD module or other local membership mechanism has determined that local members on interface I desire to receive traffic sent specifically by S to G. "local_receiver_include(*,G,I)" is true if the IGMP/MLD module or other local membership mechanism has determined that local members on interface I desire to receive all traffic sent to G (possibly excluding traffic from a specific set of sources). "local_receiver_exclude(S,G,I) is true if "local_receiver_include(*,G,I)" is true but none of the local members desire to receive traffic from S.

The set "joins(*,*,RP)" is the set of all interfaces on which the router has received (*,*,RP) Joins:

```
joins(*,*,RP) =
    { all interfaces I such that
      DownstreamJPState(*,*,RP,I) is either Join or
          Prune-Pending }
```

DownstreamJPState(*,*,RP,I) is the state of the finite state machine in Section 4.5.1.

The set "joins(*,G)" is the set of all interfaces on which the router has received (*,G) Joins:

```
joins(*,G) =
    { all interfaces I such that
      DownstreamJPState(*,G,I) is either Join or Prune-
Pending }
```

DownstreamJPState(*,G,I) is the state of the finite state machine in Section 4.5.2.

The set "joins(S,G)" is the set of all interfaces on which the router has received (S,G) Joins:

```
joins(S,G) =
    { all interfaces I such that
      DownstreamJPState(S,G,I) is either Join or Prune-
Pending }
```

DownstreamJPState(S,G,I) is the state of the finite state machine in Section 4.5.3.

The set "prunes(S,G,rpt)" is the set of all interfaces on which the router has received (*,G) joins and (S,G,rpt) prunes.

```
prunes(S,G,rpt) =
    { all interfaces I such that
      DownstreamJPState(S,G,rpt,I) is Prune or PruneTmp }
```

DownstreamJPState(S,G,rpt,I) is the state of the finite state machine in Section 4.5.4.

The set "lost_assert(*,G)" is the set of all interfaces on which the router has received (*,G) joins but has lost a (*,G) assert. The macro lost_assert(*,G,I) is defined in Section 4.6.5.

```
lost_assert(*,G) =
    { all interfaces I such that
      lost_assert(*,G,I) == TRUE }
```

The set "lost_assert(S,G,rpt)" is the set of all interfaces on which the router has received (*,G) joins but has lost an (S,G) assert. The macro lost_assert(S,G,rpt,I) is defined in Section 4.6.5.

```
lost_assert(S,G,rpt) =
    { all interfaces I such that
      lost_assert(S,G,rpt,I) == TRUE }
```

The set "lost_assert(S,G)" is the set of all interfaces on which the router has received (S,G) joins but has lost an (S,G) assert. The macro lost_assert(S,G,I) is defined in Section 4.6.5.

```
lost_assert(S,G) =
    { all interfaces I such that
      lost_assert(S,G,I) == TRUE }
```

The following pseudocode macro definitions are also used in many places in the specification. Basically, RPF' is the RPF neighbor towards an RP or source unless a PIM-Assert has overridden the normal choice of neighbor.

```
neighbor RPF'(*,G) {
    if ( I_Am_Assert_Loser(*, G, RPF_interface(RP(G))) ) {
         return AssertWinner(*, G, RPF_interface(RP(G)) )
    } else {
         return NBR( RPF_interface(RP(G)), MRIB.next_hop( RP(G) ) )
    }
}

neighbor RPF'(S,G,rpt) {
    if( I_Am_Assert_Loser(S, G, RPF_interface(RP(G)) ) ) {
         return AssertWinner(S, G, RPF_interface(RP(G)) )
    } else {
         return RPF'(*,G)
    }
}

neighbor RPF'(S,G) {
    if ( I_Am_Assert_Loser(S, G, RPF_interface(S) )) {
         return AssertWinner(S, G, RPF_interface(S) )
    } else {
         return NBR( RPF_interface(S), MRIB.next_hop( S ) )
    }
}
```

RPF'(*,G) and RPF'(S,G) indicate the neighbor from which data packets should be coming and to which joins should be sent on the RP tree and SPT, respectively.

RPF'(S,G,rpt) is basically RPF'(*,G) modified by the result of an Assert(S,G) on RPF_interface(RP(G)). In such a case, packets from S will be originating from a different router than RPF'(*,G). If we only have active (*,G) Join state, we need to accept packets from RPF'(S,G,rpt) and add a Prune(S,G,rpt) to the periodic Join(*,G) messages that we send to RPF'(*,G) (see Section 4.5.8).

The function `MRIB.next_hop( S )` returns an address of the next-hop PIM neighbor toward the host S, as indicated by the current MRIB. If S is directly adjacent, then `MRIB.next_hop( S )` returns NULL. At the RP for G, `MRIB.next_hop( RP(G))` returns NULL.

The function `NBR( I, A )` uses information gathered through PIM Hello messages to map the IP address A of a directly connected PIM neighbor router on interface I to the primary IP address of the same router (Section 4.3.4). The primary IP address of a neighbor is the address that it uses as the source of its PIM Hello messages. Note that a neighbor's IP address may be non-unique within the PIM neighbor database due to scope issues. The address must, however, be unique amongst the addresses of all the PIM neighbors on a specific interface.

I_Am_Assert_Loser(S, G, I) is true if the Assert state machine (in Section 4.6.1) for (S,G) on Interface I is in "I am Assert Loser" state.

I_Am_Assert_Loser(*, G, I) is true if the Assert state machine (in Section 4.6.2) for (*,G) on Interface I is in "I am Assert Loser" state.

4.2. Data Packet Forwarding Rules

The PIM-SM packet forwarding rules are defined below in pseudocode.

`iif` is the incoming interface of the packet.
`S` is the source address of the packet.
`G` is the destination address of the packet (group address).
`RP` is the address of the Rendezvous Point for this group.
`RPF_interface(S)` is the interface the MRIB indicates would be used to route packets to S.
`RPF_interface(RP)` is the interface the MRIB indicates would be used to route packets to RP, except at the RP when it is the decapsulation interface (the "virtual" interface on which register packets are received).

First, we restart (or start) the Keepalive Timer if the source is on a directly connected subnet.

Second, we check to see if the SPTbit should be set because we've now switched from the RP tree to the SPT.

Next, we check to see whether the packet should be accepted based on TIB state and the interface that the packet arrived on.

If the packet should be forwarded using (S,G) state, we then build an outgoing interface list for the packet. If this list is not empty, then we restart the (S,G) state Keepalive Timer.

If the packet should be forwarded using (*,*,RP) or (*,G) state, then we just build an outgoing interface list for the packet. We also check if we should initiate a switch to start receiving this source on a shortest path tree.

Finally we remove the incoming interface from the outgoing interface list we've created, and if the resulting outgoing interface list is not empty, we forward the packet out of those interfaces.

On receipt of data from S to G on interface iif:

```
if( DirectlyConnected(S) == TRUE AND iif == RPF_interface(S) ) {
      set KeepaliveTimer(S,G) to Keepalive_Period
      # Note: a register state transition or UpstreamJPState(S,G)
      # transition may happen as a result of restarting
      # KeepaliveTimer, and must be dealt with here.
}

if( iif == RPF_interface(S) AND UpstreamJPState(S,G) == Joined AND
   inherited_olist(S,G) ≠ NULL ) {
       set KeepaliveTimer(S,G) to Keepalive_Period
}

Update_SPTbit(S,G,iif)
oiflist = NULL

if( iif == RPF_interface(S) AND SPTbit(S,G) == TRUE ) {
   oiflist = inherited_olist(S,G)
} else if( iif == RPF_interface(RP(G)) AND SPTbit(S,G) == FALSE) {
  oiflist = inherited_olist(S,G,rpt)
  CheckSwitchToSpt(S,G)
} else {
    # Note: RPF check failed
    # A transition in an Assert FSM may cause an Assert(S,G)
    # or Assert(*,G) message to be sent out interface iif.
    # See section 4.6 for details.
    if ( SPTbit(S,G) == TRUE AND iif is in inherited_olist(S,G) ) {
       send Assert(S,G) on iif
    } else if ( SPTbit(S,G) == FALSE AND
                iif is in inherited_olist(S,G,rpt) {
       send Assert(*,G) on iif
    }
}

oiflist = oiflist ⊖ iif
forward packet on all interfaces in oiflist
```

This pseudocode employs several "macro" definitions:

`DirectlyConnected(S)` is TRUE if the source S is on any subnet that is directly connected to this router (or for packets originating on this router).

`inherited_olist(S,G)` and `inherited_olist(S,G,rpt)` are defined in Section 4.1.

Basically, `inherited_olist(S,G)` is the outgoing interface list for packets forwarded on (S,G) state, taking into account (*,*,RP) state, (*,G) state, asserts, etc.

`inherited_olist(S,G,rpt)` is the outgoing interface list for packets forwarded on (*,*,RP) or (*,G) state, taking into account (S,G,rpt) prune state, asserts, etc.

Update_SPTbit(S,G,iif) is defined in Section 4.2.2.

CheckSwitchToSpt(S,G) is defined in Section 4.2.1.

UpstreamJPState(S,G) is the state of the finite state machine in Section 4.5.7.

Keepalive_Period is defined in Section 4.10.

Data-triggered PIM-Assert messages sent from the above forwarding code should be rate-limited in a implementation-dependent manner.

4.2.1. Last-Hop Switchover to the SPT

In Sparse-Mode PIM, last-hop routers join the shared tree towards the RP. Once traffic from sources to joined groups arrives at a last-hop router, it has the option of switching to receive the traffic on a shortest path tree (SPT).

The decision for a router to switch to the SPT is controlled as follows:

```
void
CheckSwitchToSpt(S,G) {
  if ( ( pim_include(*,G) ⊖ pim_exclude(S,G)
         ⊕ pim_include(S,G) ≠ NULL )
       AND SwitchToSptDesired(S,G) ) {
         # Note: Restarting the KAT will result in the SPT switch
         set KeepaliveTimer(S,G) to Keepalive_Period
  }
}
```

SwitchToSptDesired(S,G) is a policy function that is implementation defined. An "infinite threshold" policy can be implemented by making SwitchToSptDesired(S,G) return false all the time. A "switch on first packet" policy can be implemented by making SwitchToSptDesired(S,G) return true once a single packet has been received for the source and group.

4.2.2. Setting and Clearing the (S,G) SPTbit

The (S,G) SPTbit is used to distinguish whether to forward on (*,*,RP)/(*,G) or on (S,G) state. When switching from the RP tree to the source tree, there is a transition period when data is arriving due to upstream (*,*,RP)/(*,G) state while upstream (S,G) state is being established, during which time a router should continue to forward only on (*,*,RP)/(*,G) state. This prevents temporary black-holes that would be caused by sending a Prune(S,G,rpt) before the upstream (S,G) state has finished being established.

Thus, when a packet arrives, the (S,G) SPTbit is updated as follows:

```
void
Update_SPTbit(S,G,iif) {
  if ( iif == RPF_interface(S)
        AND JoinDesired(S,G) == TRUE
        AND ( DirectlyConnected(S) == TRUE
              OR RPF_interface(S) ≠ RPF_interface(RP(G))
              OR inherited_olist(S,G,rpt) == NULL
              OR ( ( RPF'(S,G) == RPF'(*,G) ) AND
                   ( RPF'(S,G) ≠ NULL ) )
              OR ( I_Am_Assert_Loser(S,G,iif) ) {
     Set SPTbit(S,G) to TRUE
  }
}
```

Additionally, a router can set SPTbit(S,G) to TRUE in other cases, such as when it receives

an Assert(S,G) on RPF_interface(S) (see Section 4.6.1).

`JoinDesired(S,G)` is defined in Section 4.5.7 and indicates whether we have the appropriate (S,G) Join state to wish to send a Join(S,G) upstream.

Basically, Update_SPTbit will set the SPTbit if we have the appropriate (S,G) join state, and if the packet arrived on the correct upstream interface for S, and if one or more of the following conditions applies:

1. The source is directly connected, in which case the switch to the SPT is a no-op.
2. The RPF interface to S is different from the RPF interface to the RP. The packet arrived on RPF_interface(S), and so the SPT must have been completed.
3. Noone wants the packet on the RP tree.
4. RPF'(S,G) == RPF'(*,G). In this case, the router will never be able to tell if the SPT has been completed, so it should just switch immediately.

In the case where the RPF interface is the same for the RP and for S, but RPF'(S,G) and RPF'(*,G) differ, we wait for an Assert(S,G), which indicates that the upstream router with (S,G) state believes the SPT has been completed. However, item (3) above is needed because there may not be any (*,G) state to trigger an Assert(S,G) to happen.

The SPTbit is cleared in the (S,G) upstream state machine (see Section 4.5.7) when JoinDesired(S,G) becomes FALSE.

4.3. Designated Routers (DR) and Hello Messages

A shared-media LAN like Ethernet may have multiple PIM-SM routers connected to it. A single one of these routers, the DR, will act on behalf of directly connected hosts with respect to the PIM-SM protocol. Because the distinction between LANs and point-to-point interfaces can sometimes be blurred, and because routers may also have multicast host functionality, the PIM-SM specification makes no distinction between the two. Thus, DR election will happen on all interfaces, LAN or otherwise.

DR election is performed using Hello messages. Hello messages are also the way that option negotiation takes place in PIM, so that additional functionality can be enabled, or parameters tuned.

4.3.1. Sending Hello Messages

PIM Hello messages are sent periodically on each PIM-enabled interface. They allow a router to learn about the neighboring PIM routers on each interface. Hello messages are also the mechanism used to elect a Designated Router (DR), and to negotiate additional capabilities. A router must record the Hello information received from each PIM neighbor.

Hello messages MUST be sent on all active interfaces, including physical point-to-point links, and are multicast to the 'ALL-PIM-ROUTERS' group address ('224.0.0.13' for IPv4 and 'ff02::d' for IPv6).

> *We note that some implementations do not send Hello messages on point-to-point interfaces. This is non-compliant behavior. A compliant PIM router MUST send Hello messages, even on point-to-point interfaces.*

A per-interface Hello Timer (HT(I)) is used to trigger sending Hello messages on each active interface. When PIM is enabled on an interface or a router first starts, the Hello Timer of that interface is set to a random value between 0 and `Triggered_Hello_Delay`. This prevents synchronization of Hello messages if

multiple routers are powered on simultaneously. After the initial randomized interval, Hello messages must be sent every `Hello_Period` seconds. The Hello Timer should not be reset except when it expires.

Note that neighbors will not accept Join/Prune or Assert messages from a router unless they have first heard a Hello message from that router. Thus, if a router needs to send a Join/Prune or Assert message on an interface on which it has not yet sent a Hello message with the currently configured IP address, then it MUST immediately send the relevant Hello message without waiting for the Hello Timer to expire, followed by the Join/Prune or Assert message.

The DR_Priority Option allows a network administrator to give preference to a particular router in the DR election process by giving it a numerically larger DR Priority. The DR_Priority Option SHOULD be included in every Hello message, even if no DR Priority is explicitly configured on that interface. This is necessary because priority-based DR election is only enabled when all neighbors on an interface advertise that they are capable of using the DR_Priority Option. The default priority is 1.

The Generation_Identifier (GenID) Option SHOULD be included in all Hello messages. The GenID option contains a randomly generated 32-bit value that is regenerated each time PIM forwarding is started or restarted on the interface, including when the router itself restarts. When a Hello message with a new GenID is received from a neighbor, any old Hello information about that neighbor SHOULD be discarded and superseded by the information from the new Hello message. This may cause a new DR to be chosen on that interface.

The LAN Prune Delay Option SHOULD be included in all Hello messages sent on multi-access LANs. This option advertises a router's capability to use values other than the defaults for the Propagation_Delay and Override_Interval, which affect the setting of the Prune-Pending, Upstream Join, and Override Timers (defined in Section 4.10).

The Address List Option advertises all the secondary addresses associated with the source interface of the router originating the message. The option MUST be included in all Hello messages if there are secondary addresses associated with the source interface and MAY be omitted if no secondary addresses exist.

To allow new or rebooting routers to learn of PIM neighbors quickly, when a Hello message is received from a new neighbor, or a Hello message with a new GenID is received from an existing neighbor, a new Hello message should be sent on this interface after a randomized delay between 0 and `Triggered_Hello_Delay`. This triggered message need not change the timing of the scheduled periodic message. If a router needs to send a Join/Prune to the new neighbor or send an Assert message in response to an Assert message from the new neighbor before this randomized delay has expired, then it MUST immediately send the relevant Hello message without waiting for the Hello Timer to expire, followed by the Join/Prune or Assert message. If it does not do this, then the new neighbor will discard the Join/Prune or Assert message.

Before an interface goes down or changes primary IP address, a Hello message with a zero HoldTime should be sent immediately (with the old IP address if the IP address changed). This will cause PIM neighbors to remove this neighbor (or its old IP address) immediately. After an interface has changed its IP address, it MUST send a Hello message with its new IP address. If an interface changes one of its secondary IP addresses, a Hello message with an updated Address_List option and a non-zero HoldTime should be sent immediately. This will cause PIM neighbors to update this neighbor's list of secondary addresses immediately.

4.3.2. DR Election

When a PIM Hello message is received on interface I, the following information about the sending neighbor is recorded:

`neighbor.interface`
: The interface on which the Hello message arrived.

`neighbor.primary_ip_address`
: The IP address that the PIM neighbor used as the source address of the Hello message.

`neighbor.genid`
: The Generation ID of the PIM neighbor.

`neighbor.dr_priority`
: The DR Priority field of the PIM neighbor, if it is present in the Hello message.

`neighbor.dr_priority_present`
: A flag indicating if the DR Priority field was present in the Hello message.

`neighbor.timeout`
: A timer value to time out the neighbor state when it becomes stale, also known as the Neighbor Liveness Timer.

  The Neighbor Liveness Timer (NLT(N,I)) is reset to `Hello_Holdtime` (from the Hello Holdtime option) whenever a Hello message is received containing a Holdtime option, or to `Default_Hello_Holdtime` if the Hello message does not contain the Holdtime option.

  Neighbor state is deleted when the neighbor timeout expires.

The function for computing the DR on interface I is:

```
host
DR(I) {
    dr = me
    for each neighbor on interface I {
        if ( dr_is_better( neighbor, dr, I ) == TRUE ) {
            dr = neighbor
        }
    }
    return dr
}
```

The function used for comparing DR "metrics" on interface I is:

```
bool
dr_is_better(a,b,I) {
    if( there is a neighbor n on I for which n.dr_priority_present
            is false ) {
        return a.primary_ip_address > b.primary_ip_address
    } else {
        return ( a.dr_priority > b.dr_priority ) OR
               ( a.dr_priority == b.dr_priority AND
                 a.primary_ip_address > b.primary_ip_address )
    }
}
```

The trivial function `I_am_DR(I)` is defined to aid readability:

```
bool
I_am_DR(I) {
    return DR(I) == me
}
```

The DR Priority is a 32-bit unsigned number, and the numerically larger priority is always preferred. A router's idea of the current DR on an interface can change when a PIM Hello message is received, when a neighbor times out, or when a router's own DR Priority changes. If the router becomes the DR or ceases to be the DR, this will normally cause the DR Register state machine to change state. Subsequent actions are determined by that state machine.

> *We note that some PIM implementations do not send Hello messages on point-to-point interfaces and thus cannot perform DR election on such interfaces. This is non-compliant behavior. DR election MUST be performed on ALL active PIM-SM interfaces.*

4.3.3. Reducing Prune Propagation Delay on LANs

In addition to the information recorded for the DR Election, the following per neighbor information is obtained from the LAN Prune Delay Hello option:

`neighbor.lan_prune_delay_present`
: A flag indicating if the LAN Prune Delay option was present in the Hello message.

`neighbor.tracking_support`
: A flag storing the value of the T bit in the LAN Prune Delay option if it is present in the Hello message. This indicates the neighbor's capability to disable Join message suppression.

`neighbor.propagation_delay`
: The Propagation Delay field of the LAN Prune Delay option (if present) in the Hello message.

`neighbor.override_interval`
: The Override_Interval field of the LAN Prune Delay option (if present) in the Hello message.

The additional state described above is deleted along with the DR neighbor state when the neighbor timeout expires.

Just like the DR_Priority option, the information provided in the LAN Prune Delay option is not used unless all neighbors on a link advertise the option. The function below computes this state:

```
bool
lan_delay_enabled(I) {
    for each neighbor on interface I {
        if ( neighbor.lan_prune_delay_present == false ) {
            return false
        }
    }
    return true
}
```

The Propagation Delay inserted by a router in the LAN Prune Delay option expresses the expected message propagation delay on the link and should be configurable by the system administrator. It is used by upstream routers to figure out how long they should wait for a Join override message before pruning an interface.

PIM implementers should enforce a lower bound on the permitted values for this delay to allow for scheduling and processing delays within their router. Such delays may cause received messages to be processed later as well as triggered messages to be sent later than intended. Setting this Propagation Delay to too low a value may result in temporary forwarding outages because a downstream router will not be able to override a neighbor's Prune message before the upstream neighbor stops forwarding.

When all routers on a link are in a position to negotiate a Propagation Delay different from the default, the largest value from those advertised by each neighbor is chosen. The function for computing the Effective_Propagation_Delay of interface I is:

```
time_interval
Effective_Propagation_Delay(I) {
    if ( lan_delay_enabled(I) == false ) {
        return Propagation_delay_default
    }
    delay = Propagation_Delay(I)
    for each neighbor on interface I {
        if ( neighbor.propagation_delay > delay ) {
            delay = neighbor.propagation_delay
        }
    }
    return delay
}
```

To avoid synchronization of override messages when multiple downstream routers share a multi-access link, sending of such messages is delayed by a small random amount of time. The period of randomization should represent the size of the PIM router population on the link. Each router expresses its view of the amount of randomization necessary in the Override Interval field of the LAN Prune Delay option.

When all routers on a link are in a position to negotiate an Override Interval different from the default, the largest value from those advertised by each neighbor is chosen. The function for computing the Effective Override Interval of interface I is:

```
time_interval
Effective_Override_Interval(I) {
    if ( lan_delay_enabled(I) == false ) {
        return t_override_default
    }
    delay = Override_Interval(I)
    for each neighbor on interface I {
        if ( neighbor.override_interval > delay ) {
            delay = neighbor.override_interval
        }
    }
    return delay
}
```

Although the mechanisms are not specified in this document, it is possible for upstream routers to explicitly track the join membership of individual downstream routers if Join suppression is disabled. A router can advertise its willingness to disable Join suppression by using the T bit in the LAN Prune Delay Hello option. Unless all PIM routers on a link negotiate this capability, explicit tracking and the disabling of the Join suppression mechanism are not possible. The function for computing the state of Suppression on interface I is:

```
bool
Suppression_Enabled(I) {
    if ( lan_delay_enabled(I) == false ) {
        return true
    }
    for each neighbor on interface I {
        if ( neighbor.tracking_support == false ) {
            return true
        }
    }
    return false
}
```

Note that the setting of Suppression_Enabled(I) affects the value of t_suppressed (see Section 4.10).

4.3.4. Maintaining Secondary Address Lists

Communication of a router's interface secondary addresses to its PIM neighbors is necessary to provide the neighbors with a mechanism for mapping next_hop information obtained through their MRIB to a primary address that can be used as a destination for Join/Prune messages. The mapping is performed through the NBR macro. The primary address of a PIM neighbor is obtained from the source IP address used in its PIM Hello messages. Secondary addresses are carried within the Hello message in an Address List Hello option. The primary address of the source interface of the router MUST NOT be listed within the Address List Hello option.

In addition to the information recorded for the DR Election, the following per neighbor information is obtained from the Address List Hello option:

`neighbor.secondary_address_list`
: The list of secondary addresses used by the PIM neighbor on the interface through which the Hello message was transmitted.

When processing a received PIM Hello message containing an Address List Hello option, the list of secondary addresses in the message completely replaces any previously associated secondary addresses for that neighbor. If a received PIM Hello message does not contain an Address List Hello option, then all secondary addresses associated with the neighbor must be deleted. If a received PIM Hello message contains an Address List Hello option that includes the primary address of the sending router in the list of secondary addresses (although this is not expected), then the addresses listed in the message, excluding the primary address, are used to update the associated secondary addresses for that neighbor.

All the advertised secondary addresses in received Hello messages must be checked against those previously advertised by all other PIM neighbors on that interface. If there is a conflict and the same secondary address was previously advertised by another neighbor, then only the most recently received mapping MUST be maintained, and an error message SHOULD be logged to the administrator in a rate-limited manner.

Within one Address List Hello option, all the addresses MUST be of the same address family. It is not permitted to mix IPv4 and IPv6 addresses within the same message. In addition, the address family of the fields in the message SHOULD be the same as the IP source and destination addresses of the packet header.

4.4. PIM Register Messages

The Designated Router (DR) on a LAN or point-to-point link encapsulates multicast packets from local sources to the RP for the relevant group unless it recently received a Register-Stop message for that (S,G) or (*,G) from the RP. When the DR receives a Register-Stop message from the RP, it starts a Register-Stop Timer to maintain this state. Just before the Register-Stop Timer expires, the DR sends a Null-Register Message to the RP to allow the RP to refresh the Register-Stop information at the DR. If the Register-Stop Timer actually expires, the DR will resume encapsulating packets from the source to the RP.

4.4.1. Sending Register Messages from the DR

Every PIM-SM router has the capability to be a DR. The state machine below is used to implement Register functionality. For the purposes of specification, we represent the mechanism to encapsulate packets to the RP as a Register-Tunnel interface, which is added to or removed from the (S,G) olist. The tunnel interface then takes part in the normal packet forwarding rules as specified in Section 4.2.

If register state is maintained, it is maintained only for directly connected sources and is per-(S,G). There are four states in the DR's per-(S,G) Register state machine:

Join (J)
: The register tunnel is "joined" (the join is actually implicit, but the DR acts as if the RP has joined the DR on the tunnel interface).

Prune (P)
: The register tunnel is "pruned" (this occurs when a Register-Stop is received).

Join-Pending (JP)
: The register tunnel is pruned but the DR is contemplating adding it back.

NoInfo (NI)
: No information. This is the initial state, and the state when the router is not the DR.

In addition, a Register-Stop Timer (RST) is kept if the state machine is not in the NoInfo state.

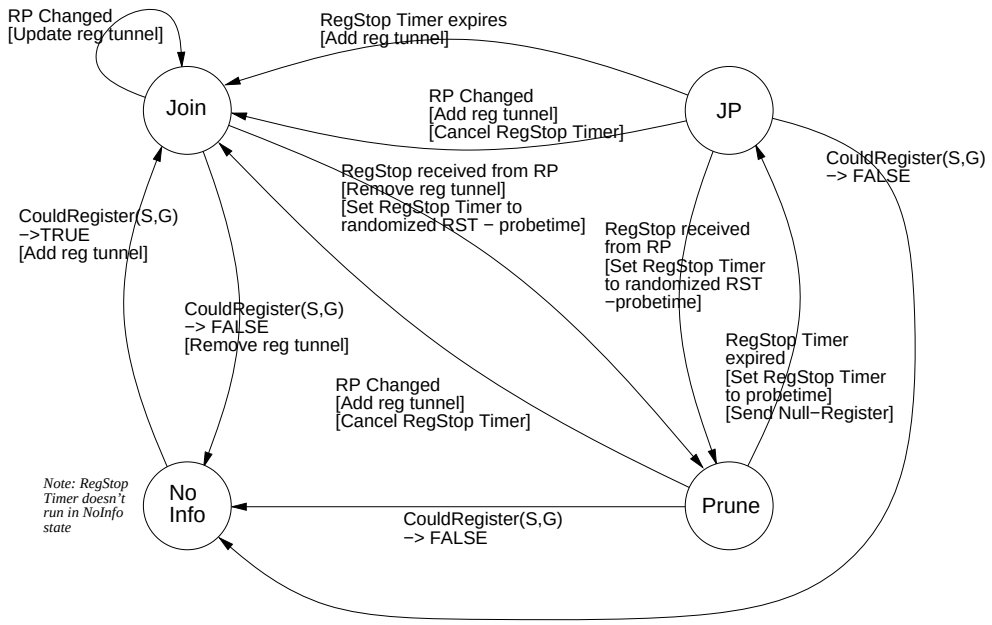

Figure 1: Per-(S,G) register state machine at a DR

Per-(S,G) register state machine at a DR in tabular form:

Prev State	**Event**				
	Register-Stop Timer expires	**Could Register →True**	**Could Register →False**	**Register-Stop received**	**RP changed**
NoInfo (NI)	-	→ J state add reg tunnel	-	-	-
Join (J)	-	-	→ NI state remove reg tunnel	→ P state remove reg tunnel; set Register-Stop Timer(*)	→ J state update reg tunnel
Join-Pending (JP)	→ J state add reg tunnel	-	→ NI state	→ P state set Register-Stop Timer(*)	→ J state add reg tunnel; cancel Register-Stop Timer
Prune (P)	→ JP state set Register-Stop Timer(**); send Null-Register	-	→ NI state	-	→ J state add reg tunnel; cancel Register-Stop Timer

Notes:

(*) The Register-Stop Timer is set to a random value chosen uniformly from the interval (0.5 * Register_Suppression_Time, 1.5 * Register_Suppression_Time) minus Register_Probe_Time.

Subtracting off Register_Probe_Time is a bit unnecessary because it is really small compared to Register_Suppression_Time, but this was in the old spec and is kept for compatibility.

(**) The Register-Stop Timer is set to Register_Probe_Time.

The following three actions are defined:

Add Register Tunnel

A Register-Tunnel virtual interface, VI, is created (if it doesn't already exist) with its encapsulation target being RP(G). DownstreamJPState(S,G,VI) is set to Join state, causing the tunnel interface to be added to `immediate_olist(S,G)` and `inherited_olist(S,G)`.

Remove Register Tunnel

VI is the Register-Tunnel virtual interface with encapsulation target of RP(G). DownstreamJPState(S,G,VI) is set to NoInfo state, causing the tunnel interface to be removed from `immediate_olist(S,G)` and `inherited_olist(S,G)`. If DownstreamJPState(S,G,VI) is NoInfo for all (S,G), then VI can be deleted.

Update Register Tunnel

This action occurs when RP(G) changes.

VI_old is the Register-Tunnel virtual interface with encapsulation target old_RP(G). A Register-Tunnel virtual interface, VI_new, is created (if it doesn't already exist) with its encapsulation target being new_RP(G). DownstreamJPState(S,G,VI_old) is set to NoInfo state and DownstreamJPState(S,G,VI_new) is set to Join state. If DownstreamJPState(S,G,VI_old) is NoInfo for all (S,G), then VI_old can be deleted.

Note that we cannot simply change the encapsulation target of VI_old because not all groups using that encapsulation tunnel will have moved to the same new RP.

CouldRegister(S,G)

The macro "CouldRegister" in the state machine is defined as:

```
bool CouldRegister(S,G) {
   return ( I_am_DR( RPF_interface(S) ) AND
            KeepaliveTimer(S,G) is running AND
            DirectlyConnected(S) == TRUE )
}
```

Note that on reception of a packet at the DR from a directly connected source, `KeepaliveTimer(S,G)` needs to be set by the packet forwarding rules *before* computing `CouldRegister(S,G)` in the register state machine, or the first packet from a source won't be registered.

Encapsulating Data Packets in the Register Tunnel

Conceptually, the Register Tunnel is an interface with a smaller MTU than the underlying IP interface towards the RP. IP fragmentation on packets forwarded on the Register Tunnel is performed based upon this smaller MTU. The encapsulating DR may perform Path MTU Discovery to the RP to determine the effective MTU of the tunnel. Fragmentation for the smaller MTU should take both the outer IP header and the PIM register header overhead into account. If a multicast packet is fragmented on the way into the Register Tunnel, each fragment is encapsulated individually so it contains IP, PIM, and inner IP headers.

In IPv6, the DR MUST perform Path MTU discovery, and an ICMP Packet Too Big message MUST be sent by the encapsulating DR if it receives a packet that will not fit in the effective MTU of the tunnel. If the MTU between the DR and the RP results in the effective tunnel MTU being smaller than 1280 (the IPv6 minimum MTU), the DR MUST send Fragmentation Required messages with an MTU value of 1280 and MUST fragment its PIM register messages as required, using an IPv6 fragmentation header between the outer IPv6 header and the PIM Register header.

The TTL of a forwarded data packet is decremented before it is encapsulated in the Register Tunnel. The encapsulating packet uses the normal TTL that the router would use for any locally-generated IP packet.

The IP ECN bits should be copied from the original packet to the IP header of the encapsulating packet. They SHOULD NOT be set independently by the encapsulating router.

The Diffserv Code Point (DSCP) should be copied from the original packet to the IP header of the encapsulating packet. It MAY be set independently by the encapsulating router, based upon static configuration or traffic classification. See [12] for more discussion on setting the DSCP on tunnels.

Handling Register-Stop(*,G) Messages at the DR

An old RP might send a Register-Stop message with the source address set to all zeros. This was the normal course of action in RFC 2362 when the Register message matched against (*,G) state at the RP, and it was defined as meaning "stop encapsulating all sources for this group". However, the behavior of such a Register-Stop(*,G) is ambiguous or incorrect in some circumstances.

We specify that an RP should not send Register-Stop(*,G) messages, but for compatibility, a DR should be able to accept one if it is received.

A Register-Stop(*,G) should be treated as a Register-Stop(S,G) for all (S,G) Register state machines that are not in the NoInfo state. A router should not apply a Register-Stop(*,G) to sources that become active after the Register-Stop(*,G) was received.

4.4.2. Receiving Register Messages at the RP

When an RP receives a Register message, the course of action is decided according to the following pseudocode:

```
packet_arrives_on_rp_tunnel( pkt ) {
    if( outer.dst is not one of my addresses ) {
        drop the packet silently.
        #  Note: this may be a spoofing attempt
    }
    if( I_am_RP(G) AND outer.dst == RP(G) ) {
        sentRegisterStop = FALSE;
        if ( register.borderbit == TRUE ) {
            if ( PMBR(S,G) == unknown ) {
                PMBR(S,G) = outer.src
            } else if ( outer.src != PMBR(S,G) ) {
                send Register-Stop(S,G) to outer.src
                drop the packet silently.
            }
        }
        if ( SPTbit(S,G) OR
             ( SwitchToSptDesired(S,G) AND
               ( inherited_olist(S,G) == NULL ))) {
            send Register-Stop(S,G) to outer.src
            sentRegisterStop = TRUE;
        }
        if ( SPTbit(S,G) OR SwitchToSptDesired(S,G) ) {
            if ( sentRegisterStop == TRUE ) {
                    set KeepaliveTimer(S,G) to RP_Keepalive_Period;
            } else {
                    set KeepaliveTimer(S,G) to Keepalive_Period;
            }
        }
        if( !SPTbit(S,G) AND ! pkt.NullRegisterBit ) {
            decapsulate and forward the inner packet to
            inherited_olist(S,G,rpt) #  Note (†)
        }
    } else {
        send Register-Stop(S,G) to outer.src
        #  Note (*)
    }
}
```

`outer.dst` is the IP destination address of the encapsulating header.

`outer.src` is the IP source address of the encapsulating header, i.e., the DR's address.

`I_am_RP(G)` is true if the group-to-RP mapping indicates that this router is the RP for the group.

Note (*): This may block traffic from S for Register_Suppression_Time if the DR learned about a new group-to-RP mapping before the RP did. However, this doesn't matter unless we figure out some way for the RP also to accept (*,G) joins when it doesn't

yet realize that it is about to become the RP for G. This will all get sorted out once the RP learns the new group-to-rp mapping. We decided to do nothing about this and just accept the fact that PIM may suffer interrupted (*,G) connectivity following an RP change.

Note (†): Implementations are advised not to make this a special case, but to arrange that this path rejoin the normal packet forwarding path. All of the appropriate actions from the "On receipt of data from S to G on interface iif" pseudocode in Section 4.2 should be performed.

KeepaliveTimer(S,G) is restarted at the RP when packets arrive on the proper tunnel interface and the RP desires to switch to the SPT or the SPTbit is already set. This may cause the upstream (S,G) state machine to trigger a join if the inherited_olist(S,G) is not NULL.

An RP should preserve (S,G) state that was created in response to a Register message for at least (3 * Register_Suppression_Time); otherwise, the RP may stop joining (S,G) before the DR for S has restarted sending registers. Traffic would then be interrupted until the Register-Stop Timer expires at the DR.

Thus, at the RP, KeepaliveTimer(S,G) should be restarted to (3 * Register_Suppression_Time + Register_Probe_Time).

When forwarding a packet from the Register Tunnel, the TTL of the original data packet is decremented after it is decapsulated.

The IP ECN bits should be copied from the IP header of the Register packet to the decapsulated packet.

The Diffserv Code Point (DSCP) should be copied from the IP header of the Register packet to the decapsulated packet. The RP MAY retain the DSCP of the inner packet or re-classify the packet and apply a different DSCP. Scenarios where each of these might be useful are discussed in [12].

4.5. PIM Join/Prune Messages

A PIM Join/Prune message consists of a list of groups and a list of Joined and Pruned sources for each group. When processing a received Join/Prune message, each Joined or Pruned source for a Group is effectively considered individually, and applies to one or more of the following state machines. When considering a Join/Prune message whose Upstream Neighbor Address field addresses this router, (*,G) Joins and Prunes can affect both the (*,G) and (S,G,rpt) downstream state machines, while (*,*,RP), (S,G), and (S,G,rpt) Joins and Prunes can only affect their respective downstream state machines. When considering a Join/Prune message whose Upstream Neighbor Address field addresses another router, most Join or Prune messages could affect each upstream state machine.

In general, a PIM Join/Prune message should only be accepted for processing if it comes from a known PIM neighbor. A PIM router hears about PIM neighbors through PIM Hello messages. If a router receives a Join/Prune message from a particular IP source address and it has not seen a PIM Hello message from that source address, then the Join/Prune message SHOULD be discarded without further processing. In addition, if the Hello message from a neighbor was authenticated using IPsec AH (see Section 6.3), then all Join/Prune messages from that neighbor MUST also be authenticated using IPsec AH.

We note that some older PIM implementations incorrectly fail to send Hello messages on point-to-point interfaces, so we also RECOMMEND that a configuration option be provided to allow interoperation with such older routers, but that this configuration option SHOULD

NOT be enabled by default.

4.5.1. Receiving (*,*,RP) Join/Prune Messages

The per-interface state machine for receiving (*,*,RP) Join/Prune Messages is given below. There are three states:

NoInfo (NI)
The interface has no (*,*,RP) Join state and no timers running.

Join (J)
The interface has (*,*,RP) Join state, which will cause the router to forward packets destined for any group handled by RP from this interface except if there is also (S,G,rpt) prune information (see Section 4.5.4) or the router lost an assert on this interface.

Prune-Pending (PP)
The router has received a Prune(*,*,RP) on this interface from a downstream neighbor and is waiting to see whether the prune will be overridden by another downstream router. For forwarding purposes, the Prune-Pending state functions exactly like the Join state.

In addition, the state machine uses two timers:

ExpiryTimer (ET)
This timer is restarted when a valid Join(*,*,RP) is received. Expiry of the ExpiryTimer causes the interface state to revert to NoInfo for this RP.

Prune-Pending Timer (PPT)
This timer is set when a valid Prune(*,*,RP) is received. Expiry of the Prune-Pending Timer causes the interface state to revert to NoInfo for this RP.

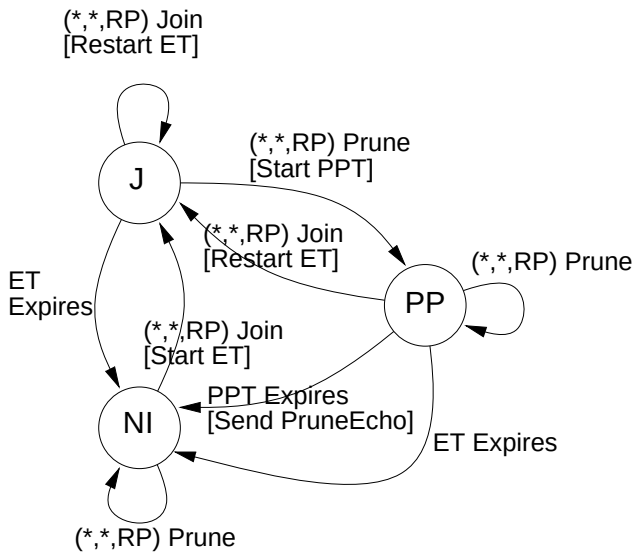

Figure 2: Downstream per-interface (*,*,RP) state machine

Downstream per-interface (*,*,RP) state machine in tabular form:

Prev State	**Event**			
	Receive Join(*,*,RP)	**Receive Prune (*,*,RP)**	**Prune-Pending Timer Expires**	**Expiry Timer Expires**
NoInfo (NI)	→ J state start Expiry Timer	→ NI state	-	-
Join (J)	→ J state restart Expiry Timer	→ PP state start Prune-Pending Timer	-	→ NI state
Prune-Pending (PP)	→ J state restart Expiry Timer	→ PP state	→ NI state Send Prune-Echo(*,*,RP)	→ NI state

The transition events "Receive Join(*,*,RP)" and "Receive Prune(*,*,RP)" imply receiving a Join or Prune targeted to this router's primary IP address on the received interface. If the upstream neighbor address field is not correct, these state transitions in this state machine must not occur, although seeing such a packet may cause state transitions in other state machines.

On unnumbered interfaces on point-to-point links, the router's address should be the same as the source address it chose for the Hello message it sent over that interface. However, on point-to-point links we also recommend that for backwards compatibility PIM Join/Prune messages with an upstream neighbor address field of all zeros are also accepted.

Transitions from NoInfo State

When in NoInfo state, the following event may trigger a transition:

Receive Join(*,*,RP)

A Join(*,*,RP) is received on interface I with its Upstream Neighbor Address set to the router's primary IP address on I.

The (*,*,RP) downstream state machine on interface I transitions to the Join state. The Expiry Timer (ET) is started and set to the HoldTime from the triggering Join/Prune message.

Note that it is possible to receive a Join(*,*,RP) message for an RP for which we do not have information telling us that it is an RP. In the case of (*,*,RP) state, so long as we have a route to the RP, this will not cause a problem, and the transition should still take place.

Transitions from Join State

When in Join state, the following events may trigger a transition:

Receive Join(*,*,RP)

A Join(*,*,RP) is received on interface I with its Upstream Neighbor Address set to the router's primary IP address on I.

The (*,*,RP) downstream state machine on interface I remains in Join state, and the Expiry Timer (ET) is restarted, set to maximum of its current value and the HoldTime from the triggering Join/Prune message.

Receive Prune(*,*,RP)

A Prune(*,*,RP) is received on interface I with its Upstream Neighbor Address set to the router's primary IP address on I.

The (*,*,RP) downstream state machine on interface I transitions to the Prune-Pending state. The Prune-Pending Timer is started. It is set to the J/P_Override_Interval(I) if the router has more than one neighbor on that interface; otherwise, it is set to zero, causing it to expire immediately.

Expiry Timer Expires

The Expiry Timer for the (*,*,RP) downstream state machine on interface I expires.

The (*,*,RP) downstream state machine on interface I transitions to the NoInfo state.

Transitions from Prune-Pending State

When in Prune-Pending state, the following events may trigger a transition:

Receive Join(*,*,RP)

A Join(*,*,RP) is received on interface I with its Upstream Neighbor Address set to the router's primary IP address on I.

The (*,*,RP) downstream state machine on interface I transitions to the Join state. The Prune-Pending Timer is canceled (without triggering an expiry event). The Expiry Timer is restarted, set to maximum of its current value and the HoldTime from the triggering Join/Prune message.

Expiry Timer Expires

The Expiry Timer for the (*,*,RP) downstream state machine on interface I expires.

The (*,*,RP) downstream state machine on interface I transitions to the NoInfo state.

Prune-Pending Timer Expires

The Prune-Pending Timer for the (*,*,RP) downstream state machine on interface I expires.

The (*,*,RP) downstream state machine on interface I transitions to the NoInfo state. A PruneEcho(*,*,RP) is sent onto the subnet connected to interface I.

The action "Send PruneEcho(*,*,RP)" is triggered when the router stops forwarding on an interface as a result of a prune. A PruneEcho(*,*,RP) is simply a Prune(*,*,RP) message sent by the upstream router on a LAN with its own address in the Upstream Neighbor Address field. Its purpose is to add additional reliability so that if a Prune that should have been overridden by another router is lost locally on the LAN, then the PruneEcho may be received and cause the override to happen. A PruneEcho(*,*,RP) need not be sent on an interface that contains only a single PIM neighbor during the time this state machine was in Prune-Pending state.

4.5.2. Receiving (*,G) Join/Prune Messages

When a router receives a Join(*,G), it must first check to see whether the RP in the message matches RP(G) (the router's idea of who the RP is). If the RP in the message does not match RP(G), the Join(*,G) should be silently dropped. (Note that other source list entries, such as (S,G,rpt) or (S,G), in the same Group-Specific Set should still be processed.) If a

router has no RP information (e.g., has not recently received a BSR message), then it may choose to accept Join(*,G) and treat the RP in the message as RP(G). Received Prune(*,G) messages are processed even if the RP in the message does not match RP(G).

The per-interface state machine for receiving (*,G) Join/Prune Messages is given below. There are three states:

NoInfo (NI)
The interface has no (*,G) Join state and no timers running.

Join (J)
The interface has (*,G) Join state, which will cause the router to forward packets destined for G from this interface except if there is also (S,G,rpt) prune information (see Section 4.5.4) or the router lost an assert on this interface.

Prune-Pending (PP)
The router has received a Prune(*,G) on this interface from a downstream neighbor and is waiting to see whether the prune will be overridden by another downstream router. For forwarding purposes, the Prune-Pending state functions exactly like the Join state.

In addition, the state machine uses two timers:

Expiry Timer (ET)
This timer is restarted when a valid Join(*,G) is received. Expiry of the Expiry Timer causes the interface state to revert to NoInfo for this group.

Prune-Pending Timer (PPT)
This timer is set when a valid Prune(*,G) is received. Expiry of the Prune-Pending Timer causes the interface state to revert to NoInfo for this group.

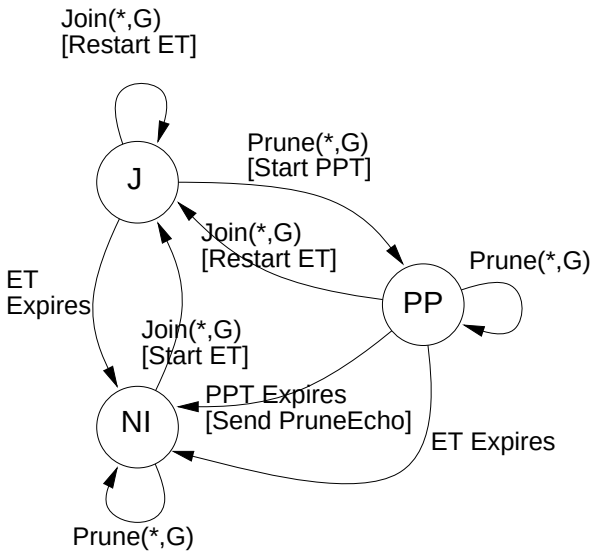

Figure 3: Downstream per-interface (*,G) state machine

Downstream per-interface (*,G) state machine in tabular form:

Prev State	**Event**			
	Receive Join(*,G)	**Receive Prune(*,G)**	**Prune-Pending Timer Expires**	**Expiry Timer Expires**
NoInfo (NI)	→ J state start Expiry Timer	→ NI state	-	-
Join (J)	→ J state restart Expiry Timer	→ PP state start Prune-Pending Timer	-	→ NI state
Prune-Pending (PP)	→ J state restart Expiry Timer	→ PP state	→ NI state Send Prune-Echo(*,G)	→ NI state

The transition events "Receive Join(*,G)" and "Receive Prune(*,G)" imply receiving a Join or Prune targeted to this router's primary IP address on the received interface. If the upstream neighbor address field is not correct, these state transitions in this state machine must not occur, although seeing such a packet may cause state transitions in other state machines.

On unnumbered interfaces on point-to-point links, the router's address should be the same as the source address it chose for the Hello message it sent over that interface. However, on point-to-point links we also recommend that for backwards compatibility PIM Join/Prune messages with an upstream neighbor address field of all zeros are also accepted.

Transitions from NoInfo State

When in NoInfo state, the following event may trigger a transition:

Receive Join(*,G)

A Join(*,G) is received on interface I with its Upstream Neighbor Address set to the router's primary IP address on I.

The (*,G) downstream state machine on interface I transitions to the Join state. The Expiry Timer (ET) is started and set to the HoldTime from the triggering Join/Prune message.

Transitions from Join State

When in Join state, the following events may trigger a transition:

Receive Join(*,G)

A Join(*,G) is received on interface I with its Upstream Neighbor Address set to the router's primary IP address on I.

The (*,G) downstream state machine on interface I remains in Join state, and the Expiry Timer (ET) is restarted, set to maximum of its current value and the HoldTime from the triggering Join/Prune message.

Receive Prune(*,G)

A Prune(*,G) is received on interface I with its Upstream Neighbor Address set to the router's primary IP address on I.

The (*,G) downstream state machine on interface I transitions to the Prune-Pending state. The Prune-Pending Timer is started. It is set to the J/P_Override_Interval(I) if the router has more than one neighbor on that

interface; otherwise, it is set to zero, causing it to expire immediately.

Expiry Timer Expires

The Expiry Timer for the (*,G) downstream state machine on interface I expires.

The (*,G) downstream state machine on interface I transitions to the NoInfo state.

Transitions from Prune-Pending State

When in Prune-Pending state, the following events may trigger a transition:

Receive Join(*,G)

A Join(*,G) is received on interface I with its Upstream Neighbor Address set to the router's primary IP address on I.

The (*,G) downstream state machine on interface I transitions to the Join state. The Prune-Pending Timer is canceled (without triggering an expiry event). The Expiry Timer is restarted, set to maximum of its current value and the HoldTime from the triggering Join/Prune message.

Expiry Timer Expires

The Expiry Timer for the (*,G) downstream state machine on interface I expires.

The (*,G) downstream state machine on interface I transitions to the NoInfo state.

Prune-Pending Timer Expires

The Prune-Pending Timer for the (*,G) downstream state machine on interface I expires.

The (*,G) downstream state machine on interface I transitions to the NoInfo state. A PruneEcho(*,G) is sent onto the subnet connected to interface I.

The action "Send PruneEcho(*,G)" is triggered when the router stops forwarding on an interface as a result of a prune. A PruneEcho(*,G) is simply a Prune(*,G) message sent by the upstream router on a LAN with its own address in the Upstream Neighbor Address field. Its purpose is to add additional reliability so that if a Prune that should have been overridden by another router is lost locally on the LAN, then the PruneEcho may be received and cause the override to happen. A PruneEcho(*,G) need not be sent on an interface that contains only a single PIM neighbor during the time this state machine was in Prune-Pending state.

4.5.3. Receiving (S,G) Join/Prune Messages

The per-interface state machine for receiving (S,G) Join/Prune messages is given below and is almost identical to that for (*,G) messages. There are three states:

NoInfo (NI)

The interface has no (S,G) Join state and no (S,G) timers running.

Join (J)

The interface has (S,G) Join state, which will cause the router to forward packets from S destined for G from this interface if the (S,G) state is active (the SPTbit is set) except if the router lost an assert on this interface.

Prune-Pending (PP)

The router has received a Prune(S,G) on this interface from a downstream neighbor and is waiting to see whether the prune will be overridden by another

downstream router. For forwarding purposes, the Prune-Pending state functions exactly like the Join state.

In addition, there are two timers:

Expiry Timer (ET)
This timer is set when a valid Join(S,G) is received. Expiry of the Expiry Timer causes this state machine to revert to NoInfo state.

Prune-Pending Timer (PPT)
This timer is set when a valid Prune(S,G) is received. Expiry of the Prune-Pending Timer causes this state machine to revert to NoInfo state.

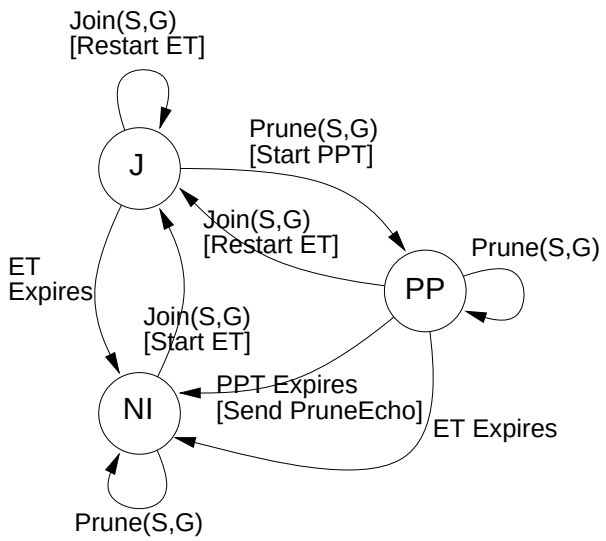

Figure 4: Downstream per-interface (S,G) state machine

Downstream per-interface (S,G) state machine in tabular form:

Prev State	**Event**			
	Receive Join(S,G)	**Receive Prune(S,G)**	**Prune-Pending Timer Expires**	**Expiry Timer Expires**
NoInfo (NI)	→ J state start Expiry Timer	→ NI state	-	-
Join (J)	→ J state restart Expiry Timer	→ PP state start Prune-Pending Timer	-	→ NI state
Prune-Pending (PP)	→ J state restart Expiry Timer	→ PP state	→ NI state Send Prune-Echo(S,G)	→ NI state

The transition events "Receive Join(S,G)" and "Receive Prune(S,G)" imply receiving a Join or Prune targeted to this router's primary IP address on the received interface. If the upstream neighbor address field is not correct, these state transitions in this state machine must not occur, although seeing such a packet may cause state transitions in other state machines.

On unnumbered interfaces on point-to-point links, the router's address should be the same as the source address it chose for the Hello message it sent over that interface. However, on point-to-point links we also recommend that for backwards compatibility PIM Join/Prune messages with an upstream neighbor address field of all zeros are also accepted.

Transitions from NoInfo State

When in NoInfo state, the following event may trigger a transition:

Receive Join(S,G)

A Join(S,G) is received on interface I with its Upstream Neighbor Address set to the router's primary IP address on I.

The (S,G) downstream state machine on interface I transitions to the Join state. The Expiry Timer (ET) is started and set to the HoldTime from the triggering Join/Prune message.

Transitions from Join State

When in Join state, the following events may trigger a transition:

Receive Join(S,G)

A Join(S,G) is received on interface I with its Upstream Neighbor Address set to the router's primary IP address on I.

The (S,G) downstream state machine on interface I remains in Join state, and the Expiry Timer (ET) is restarted, set to maximum of its current value and the HoldTime from the triggering Join/Prune message.

Receive Prune(S,G)

A Prune(S,G) is received on interface I with its Upstream Neighbor Address set to the router's primary IP address on I.

The (S,G) downstream state machine on interface I transitions to the Prune-Pending state. The Prune-Pending Timer is started. It is set to the J/P_Override_Interval(I) if the router has more than one neighbor on that interface; otherwise, it is set to zero, causing it to expire immediately.

Expiry Timer Expires

The Expiry Timer for the (S,G) downstream state machine on interface I expires.

The (S,G) downstream state machine on interface I transitions to the NoInfo state.

Transitions from Prune-Pending State

When in Prune-Pending state, the following events may trigger a transition:

Receive Join(S,G)

A Join(S,G) is received on interface I with its Upstream Neighbor Address set to the router's primary IP address on I.

The (S,G) downstream state machine on interface I transitions to the Join state. The Prune-Pending Timer is canceled (without triggering an expiry event). The Expiry Timer is restarted, set to maximum of its current value and the HoldTime from the triggering Join/Prune message.

Expiry Timer Expires

The Expiry Timer for the (S,G) downstream state machine on interface I expires.

The (S,G) downstream state machine on interface I transitions to the NoInfo state.

Prune-Pending Timer Expires

The Prune-Pending Timer for the (S,G) downstream state machine on interface I expires.

The (S,G) downstream state machine on interface I transitions to the NoInfo state. A PruneEcho(S,G) is sent onto the subnet connected to interface I.

The action "Send PruneEcho(S,G)" is triggered when the router stops forwarding on an interface as a result of a prune. A PruneEcho(S,G) is simply a Prune(S,G) message sent by the upstream router on a LAN with its own address in the Upstream Neighbor Address field. Its purpose is to add additional reliability so that if a Prune that should have been overridden by another router is lost locally on the LAN, then the PruneEcho may be received and cause the override to happen. A PruneEcho(S,G) need not be sent on an interface that contains only a single PIM neighbor during the time this state machine was in Prune-Pending state.

4.5.4. Receiving (S,G,rpt) Join/Prune Messages

The per-interface state machine for receiving (S,G,rpt) Join/Prune messages is given below. There are five states:

NoInfo (NI)

The interface has no (S,G,rpt) Prune state and no (S,G,rpt) timers running.

Prune (P)

The interface has (S,G,rpt) Prune state, which will cause the router not to forward packets from S destined for G from this interface even though the interface has active (*,G) Join state.

Prune-Pending (PP)

The router has received a Prune(S,G,rpt) on this interface from a downstream neighbor and is waiting to see whether the prune will be overridden by another downstream router. For forwarding purposes, the Prune-Pending state functions exactly like the NoInfo state.

PruneTmp (P')

This state is a transient state that for forwarding purposes behaves exactly like the Prune state. A (*,G) Join has been received (which may cancel the (S,G,rpt) Prune). As we parse the Join/Prune message from top to bottom, we first enter this state if the message contains a (*,G) Join. Later in the message, we will normally encounter an (S,G,rpt) prune to reinstate the Prune state. However, if we reach the end of the message without encountering such a (S,G,rpt) prune, then we will revert to NoInfo state in this state machine.

As no time is spent in this state, no timers can expire.

Prune-Pending-Tmp (PP')

This state is a transient state that is identical to P' except that it is associated with the PP state rather than the P state. For forwarding purposes, PP' behaves exactly like PP state.

In addition, there are two timers:

Expiry Timer (ET)

This timer is set when a valid Prune(S,G,rpt) is received. Expiry of the Expiry Timer causes this state machine to revert to NoInfo state.

Prune-Pending Timer (PPT)

This timer is set when a valid Prune(S,G,rpt) is received. Expiry of the Prune-Pending Timer causes this state machine to move on to Prune state.

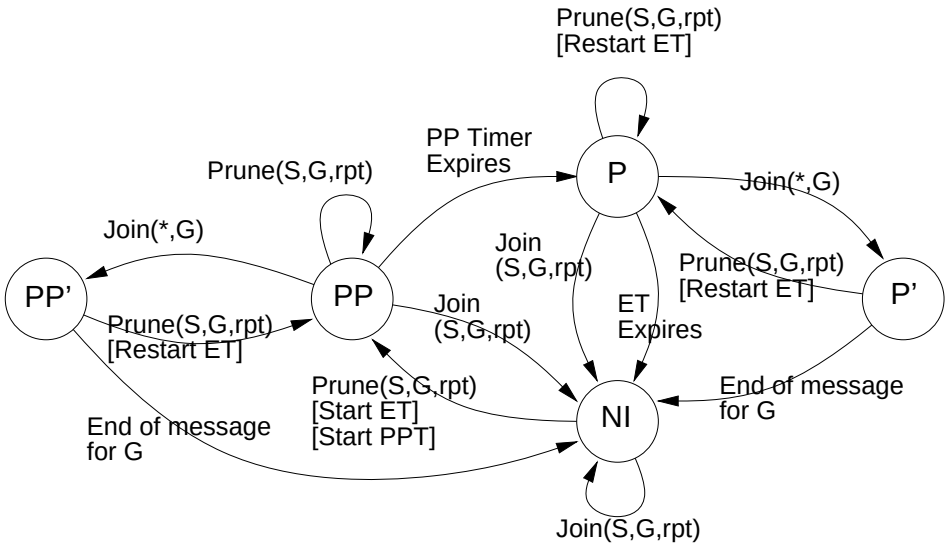

Figure 5: Downstream per-interface (S,G,rpt) state machine

Downstream per-interface (S,G,rpt) state machine in tabular form:

Prev State	**Event**					
	Receive Join(*,G)	**Receive Join (S,G,rpt)**	**Receive Prune (S,G,rpt)**	**End of Message**	**Prune-Pending Timer Expires**	**Expiry Timer Expires**
NoInfo (NI)	-	-	→ PP state start Prune-Pending Timer; start Expiry Timer	-	-	-
Prune (P)	→ P' state	→ NI state	→ P state restart Expiry Timer	-	-	→ **NI state**
Prune-Pending (PP)	→ PP' state	→ NI state	-	-	→ P state	-
PruneTmp (P')	-	-	→ P state restart Expiry Timer	→ NI state	-	-
Prune-Pending-Tmp (PP')	-	-	→ PP state restart Expiry Timer	→ NI state	-	-

The transition events "Receive Join(S,G,rpt)", "Receive Prune(S,G,rpt)", and "Receive Join(*,G)" imply receiving a Join or Prune targeted to this router's primary IP address on the received interface. If the upstream neighbor address field is not correct, these state transitions in this state machine must not occur, although seeing such a packet may cause state transitions in other state machines.

On unnumbered interfaces on point-to-point links, the router's address should be the same as the source address it chose for the Hello message it sent over that interface. However, on point-to-point links we also recommend that PIM Join/Prune messages with an upstream neighbor address field of all zeros are also accepted.

Transitions from NoInfo State

When in NoInfo (NI) state, the following event may trigger a transition:

Receive Prune(S,G,rpt)

A Prune(S,G,rpt) is received on interface I with its Upstream Neighbor Address set to the router's primary IP address on I.

The (S,G,rpt) downstream state machine on interface I transitions to the Prune-Pending state. The Expiry Timer (ET) is started and set to the HoldTime from the triggering Join/Prune message. The Prune-Pending Timer is started. It is set to the J/P_Override_Interval(I) if the router has more than one neighbor on that interface; otherwise, it is set to zero, causing it to expire immediately.

Transitions from Prune-Pending State

When in Prune-Pending (PP) state, the following events may trigger a transition:

Receive Join(*,G)

A Join(*,G) is received on interface I with its Upstream Neighbor Address set to the router's primary IP address on I.

The (S,G,rpt) downstream state machine on interface I transitions to Prune-Pending-Tmp state whilst the remainder of the compound Join/Prune message containing the Join(*,G) is processed.

Receive Join(S,G,rpt)

A Join(S,G,rpt) is received on interface I with its Upstream Neighbor Address set to the router's primary IP address on I.

The (S,G,rpt) downstream state machine on interface I transitions to NoInfo state. ET and PPT are canceled.

Prune-Pending Timer Expires

The Prune-Pending Timer for the (S,G,rpt) downstream state machine on interface I expires.

The (S,G,rpt) downstream state machine on interface I transitions to the Prune state.

Transitions from Prune State

When in Prune (P) state, the following events may trigger a transition:

Receive Join(*,G)

A Join(*,G) is received on interface I with its Upstream Neighbor Address set to the router's primary IP address on I.

The (S,G,rpt) downstream state machine on interface I transitions to PruneTmp state whilst the remainder of the compound Join/Prune message containing the Join(*,G) is processed.

Receive Join(S,G,rpt)

A Join(S,G,rpt) is received on interface I with its Upstream Neighbor Address set to the router's primary IP address on I.

The (S,G,rpt) downstream state machine on interface I transitions to NoInfo state. ET and PPT are canceled.

Receive Prune(S,G,rpt)

A Prune(S,G,rpt) is received on interface I with its Upstream Neighbor Address set to the router's primary IP address on I.

The (S,G,rpt) downstream state machine on interface I remains in Prune state. The Expiry Timer (ET) is restarted, set to maximum of its current value and the HoldTime from the triggering Join/Prune message.

Expiry Timer Expires

The Expiry Timer for the (S,G,rpt) downstream state machine on interface I expires.

The (S,G,rpt) downstream state machine on interface I transitions to the NoInfo state.

Transitions from Prune-Pending-Tmp State

When in Prune-Pending-Tmp (PP') state and processing a compound Join/Prune message, the following events may trigger a transition:

Receive Prune(S,G,rpt)

The compound Join/Prune message contains a Prune(S,G,rpt).

The (S,G,rpt) downstream state machine on interface I transitions back to the Prune-Pending state. The Expiry Timer (ET) is restarted, set to maximum of its current value and the HoldTime from the triggering Join/Prune message.

End of Message

The end of the compound Join/Prune message is reached.

The (S,G,rpt) downstream state machine on interface I transitions to the NoInfo state. ET and PPT are canceled.

Transitions from PruneTmp State

When in PruneTmp (P') state and processing a compound Join/Prune message, the following events may trigger a transition:

Receive Prune(S,G,rpt)

The compound Join/Prune message contains a Prune(S,G,rpt).

The (S,G,rpt) downstream state machine on interface I transitions back to the Prune state. The Expiry Timer (ET) is restarted, set to maximum of its current value and the HoldTime from the triggering Join/Prune message.

End of Message

The end of the compound Join/Prune message is reached.

The (S,G,rpt) downstream state machine on interface I transitions to the NoInfo state. ET is canceled.

Notes:

Receiving a Prune(*,G) does not affect the (S,G,rpt) downstream state machine.

Receiving a Join(*,*,RP) does not affect the (S,G,rpt) downstream state machine. If a router has originated Join(*,*,RP) and pruned a source off it using Prune(S,G,rpt), then to receive that source again it should explicitly re-join using Join(S,G,rpt) or Join(*,G). In some LAN topologies it is possible for a router sending a new Join(*,*,RP) to have to wait as much as a Join/Prune Interval before noticing that it needs to override a neighbor's preexisting Prune(S,G,rpt). This is considered acceptable, as (*,*,RP) state is intended to be used only in long-lived and persistent scenarios.

4.5.5. Sending (*,*,RP) Join/Prune Messages

The per-interface state machines for (*,*,RP) hold join state from downstream PIM routers. This state then determines whether a router needs to propagate a Join(*,*,RP) upstream towards the RP.

If a router wishes to propagate a Join(*,*,RP) upstream, it must also watch for messages on its upstream interface from other routers on that subnet, and these may modify its behavior. If it sees a Join(*,*,RP) to the correct upstream neighbor, it should suppress its own Join(*,*,RP). If it sees a Prune(*,*,RP) to the correct upstream neighbor, it should be prepared to override that prune by sending a Join(*,*,RP) almost immediately. Finally, if it sees the Generation ID (see Section 4.3) of the correct upstream neighbor change, it knows that the upstream neighbor has lost state, and it should be prepared to refresh the state by sending a Join(*,*,RP) almost immediately.

In addition, if the MRIB changes to indicate that the next hop towards the RP has changed, the router should prune off from the old next hop and join towards the new next hop.

The upstream (*,*,RP) state machine contains only two states:

Not Joined
: The downstream state machines and local membership information do not indicate that the router needs to join the (*,*,RP) tree for this RP.

Joined
: The downstream state machines and local membership information indicate that the router should join the (*,*,RP) tree for this RP.

In addition, one timer JT(*,*,RP) is kept that is used to trigger the sending of a Join(*,*,RP) to the upstream next hop towards the RP, NBR(RPF_interface(RP), MRIB.next_hop(RP)).

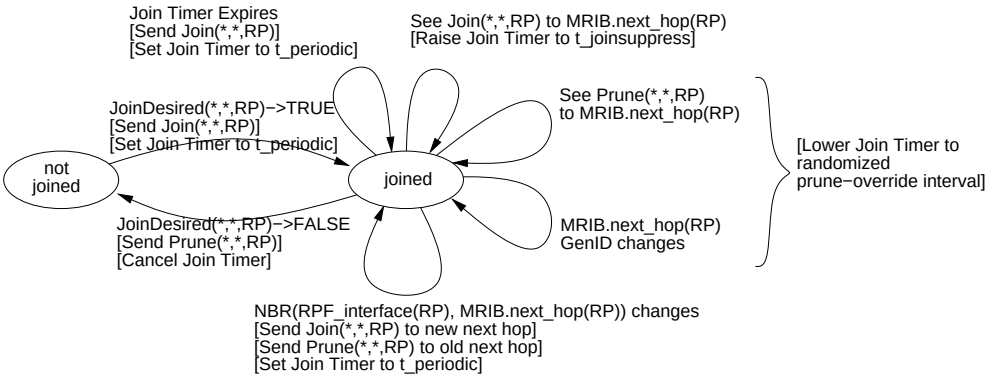

Figure 6: Upstream (*,*,RP) state machine

Upstream (*,*,RP) state machine in tabular form:

Prev State	**Event**	
	JoinDesired(*,*,RP) →True	**JoinDesired(*,*,RP) →False**
NotJoined (NJ)	→ J state Send Join(*,*,RP); Set Join Timer to t_periodic	-
Joined (J)	-	→ NJ state Send Prune(*,*,RP); Cancel Join Timer

In addition, we have the following transitions, which occur within the Joined state:

In Joined (J) State		
Timer Expires	**See Join(*,*,RP) to MRIB. next_hop(RP)**	**See Prune(*,*,RP) to MRIB. next_hop(RP)**
Send Join(*,*,RP); Set Join Timer to t_periodic	Increase Join Timer to t_joinsuppress	Decrease Join Timer to t_override

In Joined (J) State	
NBR(RPF_interface(RP), MRIB.next_hop(RP)) changes	**MRIB.next_hop(RP) GenID changes**
Send Join(*,*,RP) to new next hop; Send Prune(*,*,RP) to old next hop; set Join Timer to t_periodic	Decrease Join Timer to t_override

This state machine uses the following macro:

```
bool JoinDesired(*,*,RP) {
   if immediate_olist(*,*,RP) ≠ NULL
       return TRUE
   else
       return FALSE
}
```

JoinDesired(*,*,RP) is true when the router has received (*,*,RP) Joins from any downstream interface. Note that although JoinDesired is true, the router's sending of a Join(*,*,RP) message may be suppressed by another router sending a Join(*,*,RP) onto the upstream interface.

Transitions from NotJoined State

When the upstream (*,*,RP) state machine is in NotJoined state, the following event may trigger a state transition:

JoinDesired(*,*,RP) becomes True

The downstream state for (*,*,RP) has changed so that at least one interface is in immediate_olist(*,*,RP), making JoinDesired(*,*,RP) become True.

The upstream (*,*,RP) state machine transitions to Joined state. Send Join(*,*,RP) to the appropriate upstream neighbor, which is NBR(RPF_interface(RP), MRIB.next_hop(RP)). Set the Join Timer (JT) to expire after t_periodic seconds.

Transitions from Joined State

When the upstream (*,*,RP) state machine is in Joined state, the following events may trigger state transitions:

JoinDesired(*,*,RP) becomes False

The downstream state for (*,*,RP) has changed so no interface is in immediate_olist(*,*,RP), making JoinDesired(*,*,RP) become False.

The upstream (*,*,RP) state machine transitions to NotJoined state. Send Prune(*,*,RP) to the appropriate upstream neighbor, which is NBR(RPF_interface(RP), MRIB.next_hop(RP)). Cancel the Join Timer (JT).

Join Timer Expires

The Join Timer (JT) expires, indicating time to send a Join(*,*,RP)

Send Join(*,*,RP) to the appropriate upstream neighbor, which is NBR(RPF_interface(RP), MRIB.next_hop(RP)). Restart the Join Timer (JT) to expire after t_periodic seconds.

See Join(*,*,RP) to MRIB.next_hop(RP)

This event is only relevant if RPF_interface(RP) is a shared medium. This router sees another router on RPF_interface(RP) send a Join(*,*,RP) to NBR(RPF_interface(RP), MRIB.next_hop(RP)). This causes this router to suppress its own Join.

The upstream (*,*,RP) state machine remains in Joined state.

Let t_joinsuppress be the minimum of t_suppressed and the HoldTime from the Join/Prune message triggering this event.

If the Join Timer is set to expire in less than t_joinsuppress seconds, reset it so that it expires after t_joinsuppress seconds. If the Join Timer is set to expire in more than t_joinsuppress seconds, leave it unchanged.

See Prune(*,*,RP) to MRIB.next_hop(RP)

This event is only relevant if RPF_interface(RP) is a shared medium. This router sees another router on RPF_interface(RP) send a Prune(*,*,RP) to NBR(RPF_interface(RP), MRIB.next_hop(RP)). As this router is in Joined state, it must override the Prune after a short random interval.

The upstream (*,*,RP) state machine remains in Joined state. If the Join Timer is set to expire in more than t_override seconds, reset it so that it expires after t_override seconds. If the Join Timer is set to expire in less than t_override seconds, leave it unchanged.

NBR(RPF_interface(RP), MRIB.next_hop(RP)) changes

A change in the MRIB routing base causes the next hop towards the RP to change.

The upstream (*,*,RP) state machine remains in Joined state. Send Join(*,*,RP) to the new upstream neighbor, which is the new value of NBR(RPF_interface(RP), MRIB.next_hop(RP)). Send Prune(*,*,RP) to the old upstream neighbor, which is the old value of NBR(RPF_interface(RP), MRIB.next_hop(RP)). Set the Join Timer (JT) to expire after t_periodic seconds.

MRIB.next_hop(RP) GenID changes

The Generation ID of the router that is MRIB.next_hop(RP) changes. This normally means that this neighbor has lost state, and so the state must be refreshed.

The upstream (*,*,RP) state machine remains in Joined state. If the Join Timer is set to expire in more than t_override seconds, reset it so that it expires after t_override seconds.

4.5.6. Sending (*,G) Join/Prune Messages

The per-interface state machines for (*,G) hold join state from downstream PIM routers. This state then determines whether a router needs to propagate a Join(*,G) upstream towards the RP.

If a router wishes to propagate a Join(*,G) upstream, it must also watch for messages on its upstream interface from other routers on that subnet, and these may modify its behavior. If it sees a Join(*,G) to the correct upstream neighbor, it should suppress its own Join(*,G). If it sees a Prune(*,G) to the correct upstream neighbor, it should be prepared to override that prune by sending a Join(*,G) almost immediately. Finally, if it sees the Generation ID (see Section 4.3) of the correct upstream neighbor change, it knows that the upstream neighbor has lost state, and it should be prepared to refresh the state by sending a Join(*,G) almost immediately.

If a (*,G) Assert occurs on the upstream interface, and this changes this router's idea of the upstream neighbor, it should be prepared to ensure that the Assert winner is aware of downstream routers by sending a Join(*,G) almost immediately.

In addition, if the MRIB changes to indicate that the next hop towards the RP has changed, and either the upstream interface changes or there is no Assert winner on the upstream interface, the router should prune off from the old next hop and join towards the new next hop.

The upstream (*,G) state machine only contains two states:

Not Joined

The downstream state machines indicate that the router does not need to join the RP tree for this group.

Joined

The downstream state machines indicate that the router should join the RP tree for this group.

In addition, one timer JT(*,G) is kept that is used to trigger the sending of a Join(*,G) to the upstream next hop towards the RP, RPF'(*,G).

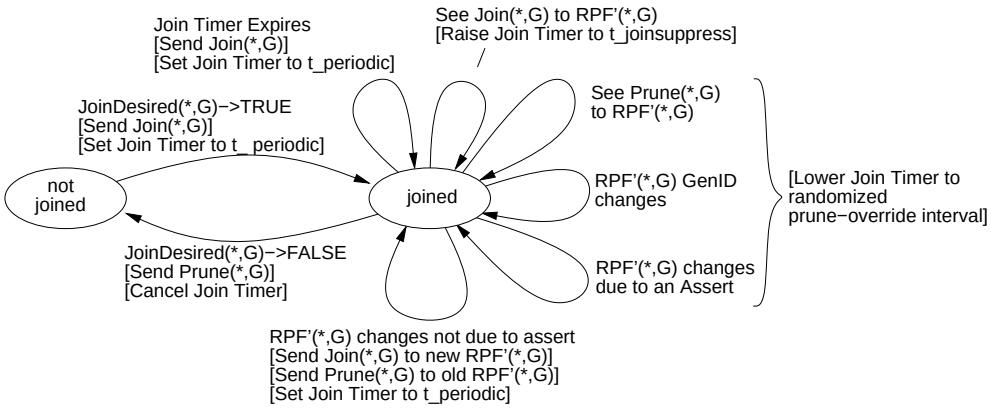

Figure 7: Upstream (*,G) state machine

Upstream (*,G) state machine in tabular form:

Prev State	**Event**	
	JoinDesired(*,G) →True	**JoinDesired(*,G) →False**
NotJoined (NJ)	→ J state Send Join(*,G); Set Join Timer to t_periodic	-
Joined (J)	-	→ NJ state Send Prune(*,G); Cancel Join Timer

In addition, we have the following transitions, which occur within the Joined state:

In Joined (J) State			
Timer Expires	**See Join(*,G) to RPF'(*,G)**	**See Prune(*,G) to RPF'(*,G)**	**RPF'(*,G) changes due to an Assert**
Send Join(*,G); Set Join Timer to t_periodic	Increase Join Timer to t_joinsuppress	Decrease Join Timer to t_override	Decrease Join Timer to t_override

In Joined (J) State	
RPF'(*,G) changes not due to an Assert	**RPF'(*,G) GenID changes**
Send Join(*,G) to new next hop; Send Prune(*,G) to old next hop; Set Join Timer to t_periodic	Decrease Join Timer to t_override

This state machine uses the following macro:

```
bool JoinDesired(*,G) {
   if (immediate_olist(*,G) ≠ NULL OR
       (JoinDesired(*,*,RP(G)) AND
        AssertWinner(*, G, RPF_interface(RP(G))) ≠ NULL))
       return TRUE
   else
       return FALSE
}
```

JoinDesired(*,G) is true when the router has forwarding state that would cause it to forward traffic for G using shared tree state. Note that although JoinDesired is true, the router's sending of a Join(*,G) message may be suppressed by another router sending a Join(*,G) onto the upstream interface.

Transitions from NotJoined State

When the upstream (*,G) state machine is in NotJoined state, the following event may trigger a state transition:

JoinDesired(*,G) becomes True

The macro JoinDesired(*,G) becomes True, e.g., because the downstream state for (*,G) has changed so that at least one interface is in immediate_olist(*,G).

The upstream (*,G) state machine transitions to Joined state. Send Join(*,G) to the appropriate upstream neighbor, which is RPF'(*,G). Set the Join Timer (JT) to expire after t_periodic seconds.

Transitions from Joined State

When the upstream (*,G) state machine is in Joined state, the following events may trigger state transitions:

JoinDesired(*,G) becomes False

The macro JoinDesired(*,G) becomes False, e.g., because the downstream state for (*,G) has changed so no interface is in immediate_olist(*,G).

The upstream (*,G) state machine transitions to NotJoined state. Send Prune(*,G) to the appropriate upstream neighbor, which is RPF'(*,G). Cancel the Join Timer (JT).

Join Timer Expires

The Join Timer (JT) expires, indicating time to send a Join(*,G)

Send Join(*,G) to the appropriate upstream neighbor, which is RPF'(*,G). Restart the Join Timer (JT) to expire after t_periodic seconds.

See Join(*,G) to RPF'(*,G)

This event is only relevant if RPF_interface(RP(G)) is a shared medium. This router sees another router on RPF_interface(RP(G)) send a Join(*,G) to RPF'(*,G). This causes this router to suppress its own Join.

The upstream (*,G) state machine remains in Joined state.

Let t_joinsuppress be the minimum of t_suppressed and the HoldTime from the Join/Prune message triggering this event. If the Join Timer is set to expire in less than t_joinsuppress seconds, reset it so that it expires after t_joinsuppress seconds. If the Join Timer is set to expire in more than t_joinsuppress seconds, leave it unchanged.

See Prune(*,G) to RPF'(*,G)

This event is only relevant if RPF_interface(RP(G)) is a shared medium. This router sees another router on RPF_interface(RP(G)) send a Prune(*,G) to RPF'(*,G). As this router is in Joined state, it must override the Prune after a short random interval.

The upstream (*,G) state machine remains in Joined state. If the Join Timer is set to expire in more than t_override seconds, reset it so that it expires after t_override seconds. If the Join Timer is set to expire in less than t_override seconds, leave it unchanged.

RPF'(*,G) changes due to an Assert

The current next hop towards the RP changes due to an Assert(*,G) on the RPF_interface(RP(G)).

The upstream (*,G) state machine remains in Joined state. If the Join Timer is set to expire in more than t_override seconds, reset it so that it expires after t_override seconds. If the Join Timer is set to expire in less than t_override seconds, leave it unchanged.

RPF'(*,G) changes not due to an Assert

An event occurred that caused the next hop towards the RP for G to change. This may be caused by a change in the MRIB routing database or the group-to-RP mapping. Note that this transition does not occur if an Assert is active and the upstream interface does not change.

The upstream (*,G) state machine remains in Joined state. Send Join(*,G) to the new upstream neighbor, which is the new value of RPF'(*,G). Send Prune(*,G) to the old upstream neighbor, which is the old value of RPF'(*,G). Use the new value of RP(G) in the Prune(*,G) message or all zeros if RP(G) becomes unknown (old value of RP(G) may be used instead to improve behavior in routers implementing older versions of this spec). Set the Join Timer (JT) to expire after t_periodic seconds.

RPF'(*,G) GenID changes

The Generation ID of the router that is RPF'(*,G) changes. This normally means that this neighbor has lost state, and so the state must be refreshed.

The upstream (*,G) state machine remains in Joined state. If the Join Timer is set to expire in more than t_override seconds, reset it so that it expires after t_override seconds.

4.5.7. Sending (S,G) Join/Prune Messages

The per-interface state machines for (S,G) hold join state from downstream PIM routers. This state then determines whether a router needs to propagate a Join(S,G) upstream towards the source.

If a router wishes to propagate a Join(S,G) upstream, it must also watch for messages on its upstream interface from other routers on that subnet, and these may modify its behavior. If it sees a Join(S,G) to the correct upstream neighbor, it should suppress its own Join(S,G). If it sees a Prune(S,G), Prune(S,G,rpt), or Prune(*,G) to the correct upstream neighbor towards S, it should be prepared to override that prune by scheduling a Join(S,G) to be sent almost immediately. Finally, if it sees the Generation ID of its upstream neighbor change, it knows that the upstream neighbor has lost state, and it should refresh the state by scheduling a Join(S,G) to be sent almost immediately.

If a (S,G) Assert occurs on the upstream interface, and this changes the this router's idea of the upstream neighbor, it should be prepared to ensure that the Assert winner is aware of downstream routers by scheduling a Join(S,G) to be sent almost immediately.

In addition, if MRIB changes cause the next hop towards the source to change, and either the upstream interface changes or there is no Assert winner on the upstream interface, the router should send a prune to the old next hop and a join to the new next hop.

The upstream (S,G) state machine only contains two states:

Not Joined

The downstream state machines and local membership information do not indicate that the router needs to join the shortest-path tree for this (S,G).

Joined

The downstream state machines and local membership information indicate that the router should join the shortest-path tree for this (S,G).

In addition, one timer JT(S,G) is kept that is used to trigger the sending of a Join(S,G) to the upstream next hop towards S, RPF'(S,G).

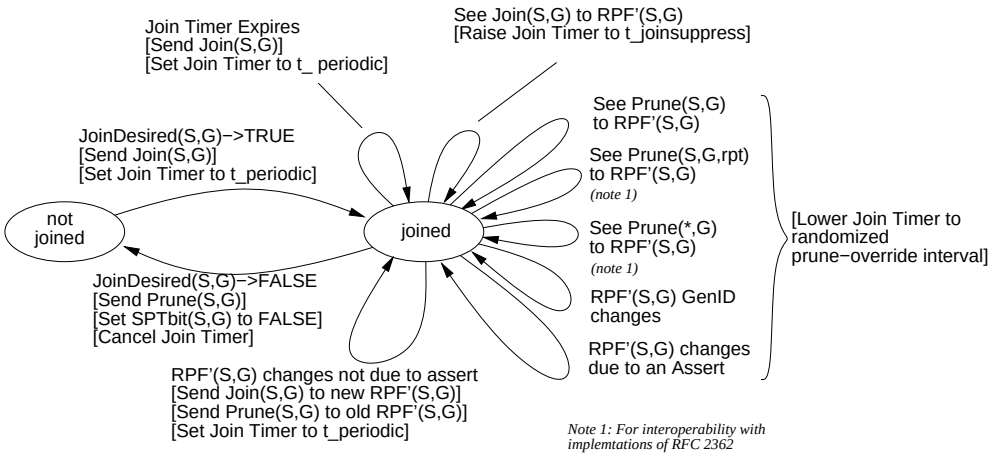

Figure 8: Upstream (S,G) state machine

Upstream (S,G) state machine in tabular form:

Prev State	**Event**	
	JoinDesired(S,G) →True	**JoinDesired(S,G) →False**
NotJoined (NJ)	→ J state Send Join(S,G); Set Join Timer to t_periodic	-
Joined (J)	-	→ NJ state Send Prune(S,G); Set SPTbit(S,G) to FALSE; Cancel Join Timer

In addition, we have the following transitions, which occur within the Joined state:

In Joined (J) State			
Timer Expires	**See Join(S,G) to RPF'(S,G)**	**See Prune(S,G) to RPF'(S,G)**	**See Prune (S,G,rpt) to RPF'(S,G)**
Send Join(S,G); Set Join Timer to t_periodic	Increase Join Timer to t_joinsuppress	Decrease Join Timer to t_override	Decrease Join Timer to t_override

In Joined (J) State			
See Prune(*,G) to RPF'(S,G)	**RPF'(S,G) changes not due to an Assert**	**RPF'(S,G) GenID changes**	**RPF'(S,G) changes due to an Assert**
Decrease Join Timer to t_override	Send Join(S,G) to new next hop; Send Prune(S,G) to old next hop; Set Join Timer to t_periodic	Decrease Join Timer to t_override	Decrease Join Timer to t_override

This state machine uses the following macro:

```
bool JoinDesired(S,G) {
    return( immediate_olist(S,G) ≠ NULL
            OR ( KeepaliveTimer(S,G) is running
                 AND inherited_olist(S,G) ≠ NULL ) )
}
```

JoinDesired(S,G) is true when the router has forwarding state that would cause it to forward traffic for G using source tree state. The source tree state can be as a result of either active source-specific join state, or the (S,G) Keepalive Timer and active non-source-specific state. Note that although JoinDesired is true, the router's sending of a Join(S,G) message may be suppressed by another router sending a Join(S,G) onto the upstream interface.

Transitions from NotJoined State

When the upstream (S,G) state machine is in NotJoined state, the following event may trigger a state transition:

JoinDesired(S,G) becomes True

The macro JoinDesired(S,G) becomes True, e.g., because the downstream state for (S,G) has changed so that at least one interface is in inherited_olist(S,G).

The upstream (S,G) state machine transitions to Joined state. Send Join(S,G) to the appropriate upstream neighbor, which is RPF'(S,G). Set the Join Timer (JT) to expire after t_periodic seconds.

Transitions from Joined State

When the upstream (S,G) state machine is in Joined state, the following events may trigger state transitions:

JoinDesired(S,G) becomes False

The macro JoinDesired(S,G) becomes False, e.g., because the downstream state for (S,G) has changed so no interface is in inherited_olist(S,G).

The upstream (S,G) state machine transitions to NotJoined state. Send Prune(S,G) to the appropriate upstream neighbor, which is RPF'(S,G). Cancel the Join Timer (JT), and set SPTbit(S,G) to FALSE.

Join Timer Expires

The Join Timer (JT) expires, indicating time to send a Join(S,G)

Send Join(S,G) to the appropriate upstream neighbor, which is RPF'(S,G). Restart the Join Timer (JT) to expire after t_periodic seconds.

See Join(S,G) to RPF'(S,G)

This event is only relevant if RPF_interface(S) is a shared medium. This router sees another router on RPF_interface(S) send a Join(S,G) to RPF'(S,G). This causes this router to suppress its own Join.

The upstream (S,G) state machine remains in Joined state.

Let t_joinsuppress be the minimum of t_suppressed and the HoldTime from the Join/Prune message triggering this event. If the Join Timer is set to expire in less than t_joinsuppress seconds, reset it so that it expires after t_joinsuppress seconds. If the Join Timer is set to expire in more than t_joinsuppress seconds, leave it unchanged.

See Prune(S,G) to RPF'(S,G)

This event is only relevant if RPF_interface(S) is a shared medium. This router sees another router on RPF_interface(S) send a Prune(S,G) to RPF'(S,G). As this router is in Joined state, it must override the Prune after a short random interval.

The upstream (S,G) state machine remains in Joined state. If the Join Timer is set to expire in more than t_override seconds, reset it so that it expires after t_override seconds.

See Prune(S,G,rpt) to RPF'(S,G)

This event is only relevant if RPF_interface(S) is a shared medium. This router sees another router on RPF_interface(S) send a Prune(S,G,rpt) to RPF'(S,G). If the upstream router is an RFC-2362-compliant PIM router, then the Prune(S,G,rpt) will cause it to stop forwarding. For backwards compatibility, this router should override the prune so that forwarding continues.

The upstream (S,G) state machine remains in Joined state. If the Join Timer is set to expire in more than t_override seconds, reset it so that it expires after t_override seconds.

See Prune(*,G) to RPF'(S,G)

This event is only relevant if RPF_interface(S) is a shared medium. This router sees another router on RPF_interface(S) send a Prune(*,G) to RPF'(S,G). If the upstream router is an RFC-2362-compliant PIM router, then the Prune(*,G) will cause it to stop forwarding. For backwards compatibility, this router should override the prune so that forwarding continues.

The upstream (S,G) state machine remains in Joined state. If the Join Timer is set to expire in more than t_override seconds, reset it so that it expires after t_override seconds.

RPF'(S,G) changes due to an Assert

The current next hop towards S changes due to an Assert(S,G) on the RPF_interface(S).

The upstream (S,G) state machine remains in Joined state. If the Join Timer is set to expire in more than t_override seconds, reset it so that it expires after t_override seconds. If the Join Timer is set to expire in less than t_override seconds, leave it unchanged.

RPF'(S,G) changes not due to an Assert

An event occurred that caused the next hop towards S to change. Note that this transition does not occur if an Assert is active and the upstream interface does not change.

The upstream (S,G) state machine remains in Joined state. Send Join(S,G) to the new upstream neighbor, which is the new value of RPF'(S,G). Send Prune(S,G) to the old upstream neighbor, which is the old value of RPF'(S,G). Set the Join Timer (JT) to expire after t_periodic seconds.

RPF'(S,G) GenID changes

The Generation ID of the router that is RPF'(S,G) changes. This normally means that this neighbor has lost state, and so the state must be refreshed.

The upstream (S,G) state machine remains in Joined state. If the Join Timer is set to expire in more than t_override seconds, reset it so that it expires after t_override seconds.

4.5.8. (S,G,rpt) Periodic Messages

(S,G,rpt) Joins and Prunes are (S,G) Joins or Prunes sent on the RP tree with the RPT bit set, either to modify the results of (*,G) Joins, or to override the behavior of other upstream LAN peers. The next section describes the rules for sending triggered messages. This section describes the rules for including a Prune(S,G,rpt) message with a Join(*,G).

When a router is going to send a Join(*,G), it should use the following pseudocode, for each (S,G) for which it has state, to decide whether to include a Prune(S,G,rpt) in the compound Join/Prune message:

```
if( SPTbit(S,G) == TRUE ) {
     #  Note: If receiving (S,G) on the SPT, we only prune off the
     #  shared tree if the RPF neighbors differ.
      if( RPF'(*,G) ≠ RPF'(S,G) ) {
          add Prune(S,G,rpt) to compound message
      }
} else if ( inherited_olist(S,G,rpt) == NULL ) {
   #  Note: all (*,G) olist interfaces received RPT prunes for (S,G).
   add Prune(S,G,rpt) to compound message
} else if ( RPF'(*,G) ≠ RPF'(S,G,rpt) {
   #  Note: we joined the shared tree, but there was an (S,G) assert
   #  and the source tree RPF neighbor is different.
   add Prune(S,G,rpt) to compound message
}
```

Note that Join(S,G,rpt) is normally sent not as a periodic message, but only as a triggered message.

4.5.9. State Machine for (S,G,rpt) Triggered Messages

The state machine for (S,G,rpt) triggered messages is required per-(S,G) when there is (*,G) or (*,*,RP) join state at a router, and the router or any of its upstream LAN peers wishes to prune S off the RP tree.

There are three states in the state machine. One of the states is when there is neither (*,G) nor (*,*,RP(G)) join state at this router. If there is (*,G) or (*,*,RP(G)) join state at the router, then the state machine must be at one of the other two states. The three states are:

Pruned(S,G,rpt)
: (*,G) or (*,*,RP(G)) Joined, but (S,G,rpt) pruned

NotPruned(S,G,rpt)
: (*,G) or (*,*,RP(G)) Joined, and (S,G,rpt) not pruned

RPTNotJoined(G)
: neither (*,G) nor (*,*,RP(G)) has been joined.

In addition, there is an (S,G,rpt) Override Timer, OT(S,G,rpt), which is used to delay triggered Join(S,G,rpt) messages to prevent implosions of triggered messages.

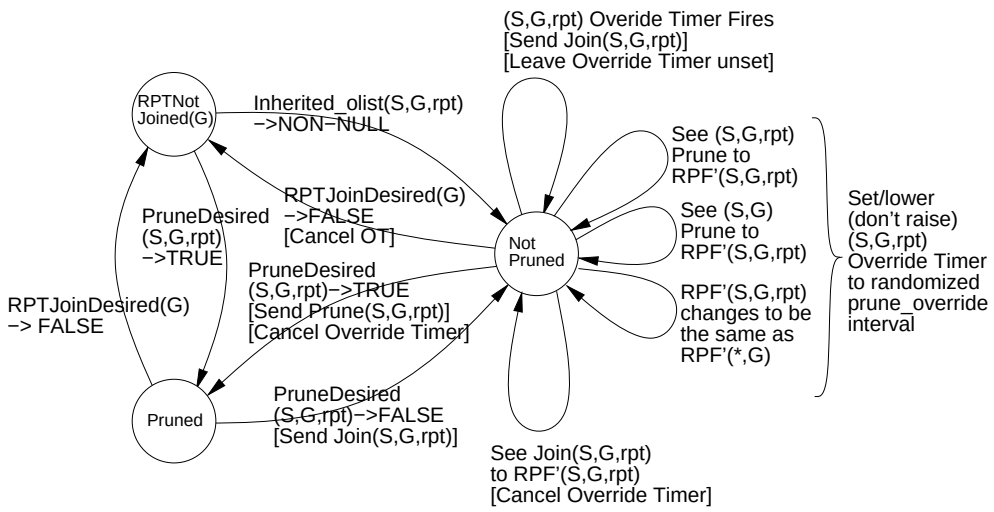

Figure 9: Upstream (S,G,rpt) state machine for triggered messages

Upstream (S,G,rpt) state machine for triggered messages in tabular form:

Prev State	**Event**			
	PruneDesired (S,G,rpt) →True	**PruneDesired (S,G,rpt) →False**	**RPTJoin Desired(G) →False**	**inherited_olist (S,G,rpt) →non-NULL**
RPTNotJoined (G) (NJ)	→ P state	-	-	→ NP state
Pruned (S,G,rpt) (P)	-	→ NP state Send Join (S,G,rpt)	→ NJ state	-
NotPruned (S,G,rpt) (NP)	→ P state Send Prune (S,G,rpt); Cancel OT	-	→ NJ state Cancel OT	-

Additionally, we have the following transitions within the NotPruned(S,G,rpt) state, which are all used for prune override behavior.

In NotPruned(S,G,rpt) State				
Override Timer expires	**See Prune (S,G,rpt) to RPF' (S,G,rpt)**	**See Join (S,G,rpt) to RPF' (S,G,rpt)**	**See Prune (S,G) to RPF' (S,G,rpt)**	**RPF' (S,G,rpt) → RPF' (*,G)**
Send Join (S,G,rpt); Leave OT unset	OT = min(OT, t_override)	Cancel OT	OT = min(OT, t_override)	OT = min(OT, t_override)

Note that the `min` function in the above state machine considers a non-running timer to have an infinite value (e.g., `min(not-running, t_override)` = `t_override`).

This state machine uses the following macros:

```
bool RPTJoinDesired(G) {
   return (JoinDesired(*,G) OR JoinDesired(*,*,RP(G)))
  }
```

RPTJoinDesired(G) is true when the router has forwarding state that would cause it to forward traffic for G using either (*,G) or (*,*,RP) shared tree state.

```
bool PruneDesired(S,G,rpt) {
      return ( RPTJoinDesired(G) AND
               ( inherited_olist(S,G,rpt) == NULL
                 OR (SPTbit(S,G)==TRUE
                     AND (RPF'(*,G) ≠ RPF'(S,G)) )))
  }
```

PruneDesired(S,G,rpt) can only be true if RPTJoinDesired(G) is true. If RPTJoinDesired(G) is true, then PruneDesired(S,G,rpt) is true either if there are no outgoing interfaces that S would be forwarded on, or if the router has active (S,G) forwarding state but RPF'(*,G) ≠ RPF'(S,G).

The state machine contains the following transition events:

See Join(S,G,rpt) to RPF'(S,G,rpt)

This event is only relevant in the "Not Pruned" state.

The router sees a Join(S,G,rpt) from someone else to RPF'(S,G,rpt), which is the correct upstream neighbor. If we're in "NotPruned" state and the (S,G,rpt) Override Timer is running, then this is because we have been triggered to send our own Join(S,G,rpt) to RPF'(S,G,rpt). Someone else beat us to it, so there's no need to send our own Join.

The action is to cancel the Override Timer.

See Prune(S,G,rpt) to RPF'(S,G,rpt)

This event is only relevant in the "NotPruned" state.

The router sees a Prune(S,G,rpt) from someone else to RPF'(S,G,rpt), which is the correct upstream neighbor. If we're in the "NotPruned" state, then we want to continue to receive traffic from S destined for G, and that traffic is being supplied by RPF'(S,G,rpt). Thus, we need to override the Prune.

The action is to set the (S,G,rpt) Override Timer to the randomized prune-override interval, t_override. However, if the Override Timer is already running, we only set the timer if doing so would set it to a lower value. At the end of this interval, if noone else has sent a Join, then we will do so.

See Prune(S,G) to RPF'(S,G,rpt)

This event is only relevant in the "NotPruned" state.

This transition and action are the same as the above transition and action, except that the Prune does not have the RPT bit set. This transition is necessary to be compatible with routers implemented from RFC2362 that don't maintain separate (S,G) and (S,G,rpt) state.

The (S,G,rpt) prune Override Timer expires

This event is only relevant in the "NotPruned" state.

When the Override Timer expires, we must send a Join(S,G,rpt) to RPF'(S,G,rpt) to override the Prune message that caused the timer to be running. We only send this if

RPF'(S,G,rpt) equals RPF'(*,G); if this were not the case, then the Join might be sent to a router that does not have (*,G) or (*,*,RP(G)) Join state, and so the behavior would not be well defined. If RPF'(S,G,rpt) is not the same as RPF'(*,G), then it may stop forwarding S. However, if this happens, then the router will send an AssertCancel(S,G), which would then cause RPF'(S,G,rpt) to become equal to RPF'(*,G) (see below).

RPF'(S,G,rpt) changes to become equal to RPF'(*,G)

This event is only relevant in the "NotPruned" state.

RPF'(S,G,rpt) can only be different from RPF'(*,G) if an (S,G) Assert has happened, which means that traffic from S is arriving on the SPT, and so Prune(S,G,rpt) will have been sent to RPF'(*,G). When RPF'(S,G,rpt) changes to become equal to RPF'(*,G), we need to trigger a Join(S,G,rpt) to RPF'(*,G) to cause that router to start forwarding S again.

The action is to set the (S,G,rpt) Override Timer to the randomized prune-override interval t_override. However, if the timer is already running, we only set the timer if doing so would set it to a lower value. At the end of this interval, if noone else has sent a Join, then we will do so.

PruneDesired(S,G,rpt)→TRUE

See macro above. This event is relevant in the "NotPruned" and "RPTNotJoined(G)" states.

The router wishes to receive traffic for G, but does not wish to receive traffic from S destined for G. This causes the router to transition into the Pruned state.

If the router was previously in NotPruned state, then the action is to send a Prune(S,G,rpt) to RPF'(S,G,rpt), and to cancel the Override Timer. If the router was previously in RPTNotJoined(G) state, then there is no need to trigger an action in this state machine because sending a Prune(S,G,rpt) is handled by the rules for sending the Join(*,G) or Join(*,*,RP).

PruneDesired(S,G,rpt)→FALSE

See macro above. This transition is only relevant in the "Pruned" state.

If the router is in the Pruned(S,G,rpt) state, and PruneDesired(S,G,rpt) changes to FALSE, this could be because the router no longer has RPTJoinDesired(G) true, or it now wishes to receive traffic from S again. If it is the former, then this transition should not happen, but instead the "RPTJoinDesired(G)→FALSE" transition should happen. Thus, this transition should be interpreted as "PruneDesired(S,G,rpt)→FALSE AND RPTJoinDesired(G)==TRUE".

The action is to send a Join(S,G,rpt) to RPF'(S,G,rpt).

RPTJoinDesired(G)→FALSE

This event is relevant in the "Pruned" and "NotPruned" states.

The router no longer wishes to receive any traffic destined for G on the RP Tree. This causes a transition to the RPTNotJoined(G) state, and the Override Timer is canceled if it was running. Any further actions are handled by the appropriate upstream state machine for (*,G) or (*,*,RP).

inherited_olist(S,G,rpt) becomes non-NULL

This transition is only relevant in the RPTNotJoined(G) state.

The router has joined the RP tree (handled by the (*,G) or (*,*,RP) upstream state machine as appropriate) and wants to receive traffic from S. This does not trigger any events in this state machine, but causes a transition to the NotPruned(S,G,rpt) state.

4.5.10. Background: (*,*,RP) and (S,G,rpt) Interaction

In Sections 4.5.8 and 4.5.9, the mechanisms for sending periodic and triggered (S,G,rpt) messages are described. The astute reader will note that periodic Prune(S,G,rpt) messages are only sent in PIM Join/Prune messages containing a Join(*,G), whereas it is possible for a triggered Prune(S,G,rpt) message to be sent when the router has no (*,G) join state. This may seem like a contradiction, but in fact it is intentional and is a side effect of not optimizing (*,*,RP) behavior.

We first note that reception of a Join(*,*,RP) by itself does not cancel (S,G,rpt) prune state on that interface, whereas receiving a Join(*,G) by itself does cancel (S,G,rpt) prune state on that interface. Similarly, reception of a Prune(*,G) on an interface with (*,*,RP) join state does not by itself prevent forwarding of G using the (*,*,RP) state; this is because a Prune(*,G) only serves to cancel (*,G) join state. Conceptually (*,*,RP) state functions "above" the normal (*,G) and (S,G) mechanisms, and so neither Join(*,*,RP) nor Prune(*,*,RP) messages affect any other state.

The upshot of this is that to prevent forwarding (S,G) on (*,*,RP) state, a Prune(S,G,rpt) must be used.

We also note that for historical reasons there is no Assert(*,*,RP) message, so any forwarding contention is resolved using Assert(*,G) messages.

We now need to consider the interaction between (*,*,RP) state and (*,G) state. If there is a need for an assert between two upstream routers on a LAN, we need to ensure that the correct thing happens for all combinations of (*,*,RP) and (*,G) forwarding state. As there is no Assert(*,*,RP) message, no router can tell whether the assert winner has (*,*,RP) state or (*,G) state. Thus, a downstream router has to treat the two the same and send its periodic Prune(S,G,rpt) messages to RPF'(*,G).

To avoid needing to specify all the complex override rules between (*,*,RP), (*,G), and (S,G,rpt), we simply require that to prune (S,G) off the (*,*,RP) tree, a Join(*,G) must also be sent.

If a router is receiving on (*,*,RP) state and has not yet had (*,G) state instantiated, it may still need to send a triggered Join(S,G,rpt) to override a Prune(S,G,rpt) that it sees directed to RPF'(*,G) on its upstream interface. Hence, triggered (S,G,rpt) messages may be sent when JoinDesired(*,G) is false but JoinDesired(*,*,RP) is true.

Finally, we note that there is an unoptimized case when the upstream router on a LAN already has (*,G) join and (S,G,rpt) prune state caused by an existing downstream router. If at this time a new Join(*,*,RP) is sent to the upstream router from a different downstream router, this will not override the (S,G,rpt) prune state at the upstream router. The override will not occur until the next time the original downstream router resends its Prune(S,G,rpt). This case was not considered worth optimizing, as (*,*,RP) state is generally very long lived, and so any minor delays in getting traffic to a new PMBR seem unimportant.

4.6. PIM Assert Messages

Where multiple PIM routers peer over a shared LAN, it is possible for more than one upstream router to have valid forwarding state for a packet, which can lead to packet duplication (see Section 3.6). PIM does not attempt to prevent this from occurring. Instead, it detects when this has happened and elects a single forwarder amongst the upstream routers to prevent further duplication. This election is performed using PIM Assert messages. Assert messages are also received by downstream routers on the LAN, and these cause subsequent Join/Prune messages to be sent to the upstream router that won the Assert.

In general, a PIM Assert message should only be accepted for processing if it comes from a known PIM neighbor. A PIM router hears about PIM neighbors through PIM Hello messages. If a router receives an Assert message from a particular IP source address and it has not seen a PIM Hello message from that source address, then the Assert message SHOULD be discarded without further processing. In addition, if the Hello message from a neighbor was authenticated using the IPsec Authentication Header (AH) (see Section 6.3), then all Assert messages from that neighbor MUST also be authenticated using IPsec AH.

We note that some older PIM implementations incorrectly fail to send Hello messages on point-to-point interfaces, so we also RECOMMEND that a configuration option be provided to allow interoperation with such older routers, but that this configuration option SHOULD NOT be enabled by default.

4.6.1. (S,G) Assert Message State Machine

The (S,G) Assert state machine for interface I is shown in Figure 10. There are three states:

NoInfo (NI)
: This router has no (S,G) assert state on interface I.

I am Assert Winner (W)
: This router has won an (S,G) assert on interface I. It is now responsible for forwarding traffic from S destined for G out of interface I. Irrespective of whether it is the DR for I, while a router is the assert winner, it is also responsible for forwarding traffic onto I on behalf of local hosts on I that have made membership requests that specifically refer to S (and G).

I am Assert Loser (L)
: This router has lost an (S,G) assert on interface I. It must not forward packets from S destined for G onto interface I. If it is the DR on I, it is no longer responsible for forwarding traffic onto I to satisfy local hosts with membership requests that specifically refer to S and G.

In addition, there is also an Assert Timer (AT) that is used to time out asserts on the assert losers and to resend asserts on the assert winner.

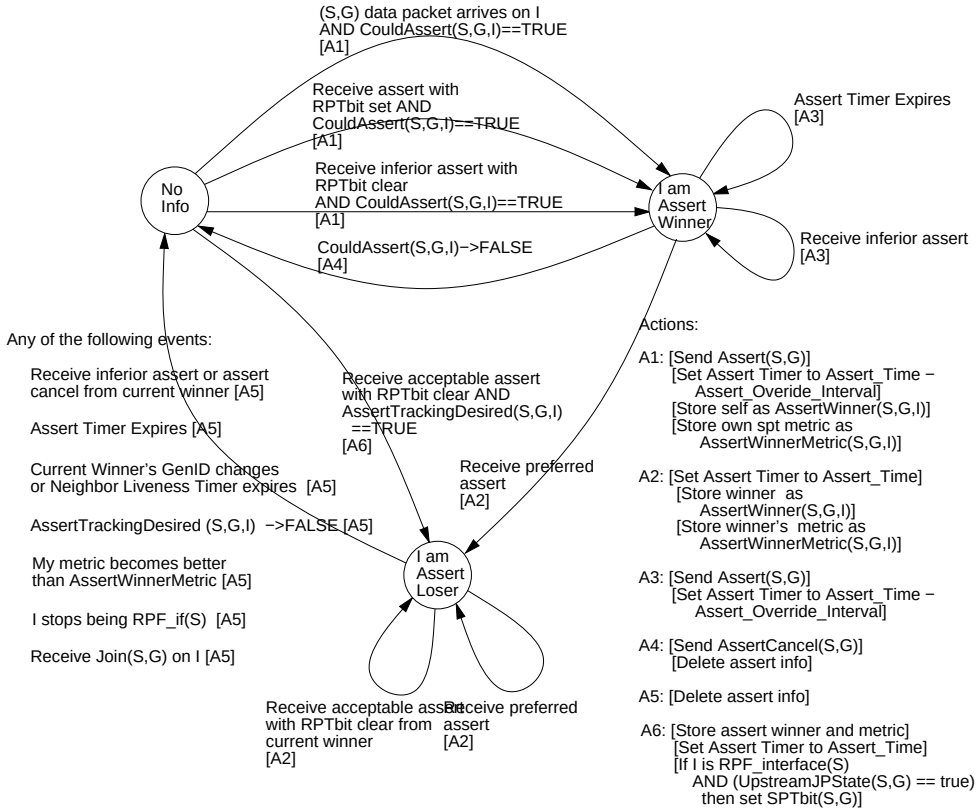

Figure 10: Per-interface (S,G) Assert State machine

Per-interface (S,G) Assert State machine in tabular form:

In NoInfo (NI) State			
Receive Inferior Assert with RPTbit clear and CouldAssert (S,G,I)	**Receive Assert with RPTbit set and CouldAssert (S,G,I)**	**Data arrives from S to G on I and CouldAssert (S,G,I)**	**Receive Acceptable Assert with RPTbit clear and AssTrDes (S,G,I)**
→ W state [Actions A1]	→ W state [Actions A1]	→ W state [Actions A1]	→ L state [Actions A6]

In I Am Assert Winner (W) State			
Assert Timer Expires	**Receive Inferior Assert**	**Receive Preferred Assert**	**CouldAssert (S,G,I) → FALSE**
→ W state [Actions A3]	→ W state [Actions A3]	→ L state [Actions A2]	→ NI state [Actions A4]

In I Am Assert Loser (L) State				
Receive Preferred Assert	**Receive Acceptable Assert with RPTbit clear from Current Winner**	**Receive Inferior Assert or Assert Cancel from Current Winner**	**Assert Timer Expires**	**Current Winner's GenID Changes or NLT Expires**
→ L state [Actions A2]	→ L state [Actions A2]	→ NI state [Actions A5]	→ NI state [Actions A5]	→ NI state [Actions A5]

In I Am Assert Loser (L) State			
AssTrDes (S,G,I) → FALSE	**my_metric → better than winner's metric**	**RPF_interface (S) stops being I**	**Receive Join(S,G) on interface I**
→ NI state [Actions A5]	→ NI state [Actions A5]	→ NI state [Actions A5]	→ NI State [Actions A5]

Note that for reasons of compactness, "AssTrDes(S,G,I)" is used in the state machine table to refer to AssertTrackingDesired(S,G,I).

Terminology:

A "preferred assert" is one with a better metric than the current winner.

An "acceptable assert" is one that has a better metric than `my_assert_metric(S,G,I)`. An assert is never considered acceptable if its metric is infinite.

An "inferior assert" is one with a worse metric than `my_assert_metric(S,G,I)`. An assert is never considered inferior if `my_assert_metric(S,G,I)` is infinite.

The state machine uses the following macros:

```
CouldAssert(S,G,I) =
  SPTbit(S,G)==TRUE
  AND (RPF_interface(S) ≠ I)
  AND (I in ( ( joins(*,*,RP(G)) ⊕ joins(*,G) ⊖
prunes(S,G,rpt) )
              ⊕ ( pim_include(*,G) ⊖ pim_exclude(S,G) )
              ⊖ lost_assert(*,G)
              ⊕ joins(S,G) ⊕ pim_include(S,G) ) )
```

CouldAssert(S,G,I) is true for downstream interfaces that would be in the inherited_olist(S,G) if (S,G) assert information was not taken into account.

```
AssertTrackingDesired(S,G,I) =
     (I in ( ( joins(*,*,RP(G)) ⊕ joins(*,G) ⊖
prunes(S,G,rpt) )
             ⊕ ( pim_include(*,G) ⊖ pim_exclude(S,G) )
             ⊖ lost_assert(*,G)
             ⊕ joins(S,G) ) )
     OR (local_receiver_include(S,G,I) == TRUE
         AND (I_am_DR(I) OR (AssertWinner(S,G,I) == me)))
     OR ((RPF_interface(S) == I) AND (JoinDesired(S,G) ==
TRUE))
     OR ((RPF_interface(RP(G)) == I) AND (JoinDesired(*,G) ==
TRUE)
         AND (SPTbit(S,G) == FALSE))
```

AssertTrackingDesired(S,G,I) is true on any interface in which an (S,G) assert might affect our behavior.

The first three lines of AssertTrackingDesired account for (*,G) join and local membership information received on I that might cause the router to be interested in asserts on I.

The 4th line accounts for (S,G) join information received on I that might cause the router to be interested in asserts on I.

The 5th and 6th lines account for (S,G) local membership information on I. Note that we can't use the pim_include(S,G) macro since it uses lost_assert(S,G,I) and would result in the router forgetting that it lost an assert if the only reason it was interested was local membership. The AssertWinner(S,G,I) check forces an assert winner to keep on being responsible for forwarding as long as local receivers are present. Removing this check would make the assert winner give up forwarding as soon as the information that originally caused it to forward went away, and the task of forwarding for local receivers would revert back to the DR.

The last three lines account for the fact that a router must keep track of assert information on upstream interfaces in order to send joins and prunes to the proper neighbor.

Transitions from NoInfo State

When in NoInfo state, the following events may trigger transitions:

Receive Inferior Assert with RPTbit cleared AND CouldAssert(S,G,I)==TRUE

An assert is received for (S,G) with the RPT bit cleared that is inferior to our own assert metric. The RPT bit cleared indicates that the sender of the assert had (S,G) forwarding state on this interface. If the assert is inferior to our metric, then we must also have (S,G) forwarding state (i.e., CouldAssert(S,G,I)==TRUE)

as (S,G) asserts beat (*,G) asserts, and so we should be the assert winner. We transition to the "I am Assert Winner" state and perform Actions A1 (below).

Receive Assert with RPTbit set AND CouldAssert(S,G,I)==TRUE
An assert is received for (S,G) on I with the RPT bit set (it's a (*,G) assert). CouldAssert(S,G,I) is TRUE only if we have (S,G) forwarding state on this interface, so we should be the assert winner. We transition to the "I am Assert Winner" state and perform Actions A1 (below).

An (S,G) data packet arrives on interface I, AND CouldAssert(S,G,I)==TRUE
An (S,G) data packet arrived on an downstream interface that is in our (S,G) outgoing interface list. We optimistically assume that we will be the assert winner for this (S,G), and so we transition to the "I am Assert Winner" state and perform Actions A1 (below), which will initiate the assert negotiation for (S,G).

Receive Acceptable Assert with RPT bit clear AND AssertTrackingDesired(S,G,I)==TRUE
We're interested in (S,G) Asserts, either because I is a downstream interface for which we have (S,G) or (*,G) forwarding state, or because I is the upstream interface for S and we have (S,G) forwarding state. The received assert has a better metric than our own, so we do not win the Assert. We transition to "I am Assert Loser" and perform Actions A6 (below).

Transitions from "I am Assert Winner" State

When in "I am Assert Winner" state, the following events trigger transitions:

Assert Timer Expires
The (S,G) Assert Timer expires. As we're in the Winner state, we must still have (S,G) forwarding state that is actively being kept alive. We resend the (S,G) Assert and restart the Assert Timer (Actions A3 below). Note that the assert winner's Assert Timer is engineered to expire shortly before timers on assert losers; this prevents unnecessary thrashing of the forwarder and periodic flooding of duplicate packets.

Receive Inferior Assert
We receive an (S,G) assert or (*,G) assert mentioning S that has a worse metric than our own. Whoever sent the assert is in error, and so we resend an (S,G) Assert and restart the Assert Timer (Actions A3 below).

Receive Preferred Assert
We receive an (S,G) assert that has a better metric than our own. We transition to "I am Assert Loser" state and perform Actions A2 (below). Note that this may affect the value of JoinDesired(S,G) and PruneDesired(S,G,rpt), which could cause transitions in the upstream (S,G) or (S,G,rpt) state machines.

CouldAssert(S,G,I) → FALSE
Our (S,G) forwarding state or RPF interface changed so as to make CouldAssert(S,G,I) become false. We can no longer perform the actions of the assert winner, and so we transition to NoInfo state and perform Actions A4 (below). This includes sending a "canceling assert" with an infinite metric.

Transitions from "I am Assert Loser" State

When in "I am Assert Loser" state, the following transitions can occur:

Receive Preferred Assert
We receive an assert that is better than that of the current assert winner. We stay

in Loser state and perform Actions A2 below.

Receive Acceptable Assert with RPTbit clear from Current Winner

We receive an assert from the current assert winner that is better than our own metric for this (S,G) (although the metric may be worse than the winner's previous metric). We stay in Loser state and perform Actions A2 below.

Receive Inferior Assert or Assert Cancel from Current Winner

We receive an assert from the current assert winner that is worse than our own metric for this group (typically, because the winner's metric became worse or because it is an assert cancel). We transition to NoInfo state, deleting the (S,G) assert information and allowing the normal PIM Join/Prune mechanisms to operate. Usually, we will eventually re-assert and win when data packets from S have started flowing again.

Assert Timer Expires

The (S,G) Assert Timer expires. We transition to NoInfo state, deleting the (S,G) assert information (Actions A5 below).

Current Winner's GenID Changes or NLT Expires

The Neighbor Liveness Timer associated with the current winner expires or we receive a Hello message from the current winner reporting a different GenID from the one it previously reported. This indicates that the current winner's interface or router has gone down (and may have come back up), and so we must assume it no longer knows it was the winner. We transition to the NoInfo state, deleting this (S,G) assert information (Actions A5 below).

AssertTrackingDesired(S,G,I)→FALSE

AssertTrackingDesired(S,G,I) becomes FALSE. Our forwarding state has changed so that (S,G) Asserts on interface I are no longer of interest to us. We transition to the NoInfo state, deleting the (S,G) assert information.

My metric becomes better than the assert winner's metric

my_assert_metric(S,G,I) has changed so that now my assert metric for (S,G) is better than the metric we have stored for current assert winner. This might happen when the underlying routing metric changes, or when CouldAssert(S,G,I) becomes true; for example, when SPTbit(S,G) becomes true. We transition to NoInfo state, delete this (S,G) assert state (Actions A5 below), and allow the normal PIM Join/Prune mechanisms to operate. Usually, we will eventually re-assert and win when data packets from S have started flowing again.

RPF_interface(S) stops being interface I

Interface I used to be the RPF interface for S, and now it is not. We transition to NoInfo state, deleting this (S,G) assert state (Actions A5 below).

Receive Join(S,G) on Interface I

We receive a Join(S,G) that has the Upstream Neighbor Address field set to my primary IP address on interface I. The action is to transition to NoInfo state, delete this (S,G) assert state (Actions A5 below), and allow the normal PIM Join/Prune mechanisms to operate. If whoever sent the Join was in error, then the normal assert mechanism will eventually re-apply, and we will lose the assert again. However, whoever sent the assert may know that the previous assert winner has died, and so we may end up being the new forwarder.

(S,G) Assert State machine Actions

A1: Send Assert(S,G).
Set Assert Timer to (Assert_Time - Assert_Override_Interval).
Store self as AssertWinner(S,G,I).
Store spt_assert_metric(S,I) as AssertWinnerMetric(S,G,I).

A2: Store new assert winner as AssertWinner(S,G,I) and assert winner metric as AssertWinnerMetric(S,G,I).
Set Assert Timer to Assert_Time.

A3: Send Assert(S,G).
Set Assert Timer to (Assert_Time - Assert_Override_Interval).

A4: Send AssertCancel(S,G).
Delete assert info (AssertWinner(S,G,I) and AssertWinnerMetric(S,G,I) will then return their default values).

A5: Delete assert info (AssertWinner(S,G,I) and AssertWinnerMetric(S,G,I) will then return their default values).

A6: Store new assert winner as AssertWinner(S,G,I) and assert winner metric as AssertWinnerMetric(S,G,I).
Set Assert Timer to Assert_Time.
If (I is RPF_interface(S)) AND (UpstreamJPState(S,G) == true) set SPTbit(S,G) to TRUE.

Note that some of these actions may cause the value of JoinDesired(S,G), PruneDesired(S,G,rpt), or RPF'(S,G) to change, which could cause further transitions in other state machines.

4.6.2. (*,G) Assert Message State Machine

The (*,G) Assert state machine for interface I is shown in Figure 11. There are three states:

NoInfo (NI)
This router has no (*,G) assert state on interface I.

I am Assert Winner (W)
This router has won an (*,G) assert on interface I. It is now responsible for forwarding traffic destined for G onto interface I with the exception of traffic for which it has (S,G) "I am Assert Loser" state. Irrespective of whether it is the DR for I, it is also responsible for handling the membership requests for G from local hosts on I.

I am Assert Loser (L)
This router has lost an (*,G) assert on interface I. It must not forward packets for G onto interface I with the exception of traffic from sources for which is has (S,G) "I am Assert Winner" state. If it is the DR, it is no longer responsible for handling the membership requests for group G from local hosts on I.

In addition, there is also an Assert Timer (AT) that is used to time out asserts on the assert losers and to resend asserts on the assert winner.

When an Assert message is received with a source address other than zero, a PIM implementation must first match it against the possible events in the (S,G) assert state machine and process any transitions and actions, before considering whether the Assert message matches against the (*,G) assert state machine.

It is important to note that NO TRANSITION CAN OCCUR in the (*,G) state machine as a result of receiving an Assert message unless the (S,G) assert state machine for the relevant S and G is in the "NoInfo" state after the (S,G) state machine

has processed the message. Also, NO TRANSITION CAN OCCUR in the (*,G) state machine as a result of receiving an assert message if that message triggers any change of state in the (S,G) state machine. Obviously, when the source address in the received message is set to zero, an (S,G) state machine for the S and G does not exist and can be assumed to be in the "NoInfo" state.

For example, if both the (S,G) and (*,G) assert state machines are in the NoInfo state when an Assert message arrives, and the message causes the (S,G) state machine to transition to either "W" or "L" state, then the assert will not be processed by the (*,G) assert state machine.

Another example: if the (S,G) assert state machine is in "L" state when an assert message is received, and the assert metric in the message is worse than `my_assert_metric(S,G,I)`, then the (S,G) assert state machine will transition to NoInfo state. In such a case, if the (*,G) assert state machine were in NoInfo state, it might appear that it would transition to "W" state, but this is not the case because this message already triggered a transition in the (S,G) assert state machine.

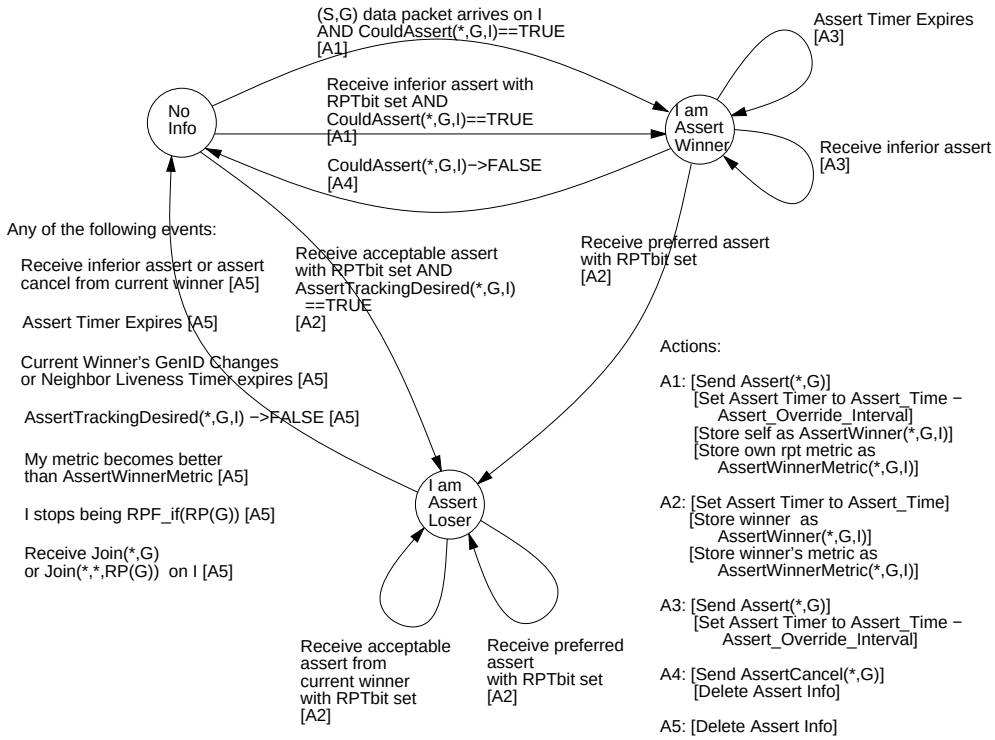

Figure 11: Per-interface (*,G) Assert State machine

Per-interface (*,G) Assert State machine in tabular form:

In NoInfo (NI) State		
Receive Inferior Assert with RPTbit set and CouldAssert(*,G,I)	**Data arrives for G on I and CouldAssert (*,G,I)**	**Receive Acceptable Assert with RPTbit set and AssTrDes (*,G,I)**
→ W state [Actions A1]	→ W state [Actions A1]	→ L state [Actions A2]

In I Am Assert Winner (W) State			
Assert Timer Expires	**Receive Inferior Assert**	**Receive Preferred Assert**	**CouldAssert (*,G,I) → FALSE**
→ W state [Actions A3]	→ W state [Actions A3]	→ L state [Actions A2]	→ NI state [Actions A4]

In I Am Assert Loser (L) State				
Receive Preferred Assert with RPTbit set	**Receive Acceptable Assert from Current Winner with RPTbit set**	**Receive Inferior Assert or Assert Cancel from Current Winner**	**Assert Timer Expires**	**Current Winner's GenID Changes or NLT Expires**
→ L state [Actions A2]	→ L state [Actions A2]	→ NI state [Actions A5]	→ NI state [Actions A5]	→ NI state [Actions A5]

In I Am Assert Loser (L) State			
AssTrDes (*,G,I) → FALSE	**my_metric → better than Winner's metric**	**RPF_interface (RP(G)) stops being I**	**Receive Join(*,G) or Join (*,*,RP(G)) on Interface I**
→ NI state [Actions A5]	→ NI state [Actions A5]	→ NI state [Actions A5]	→ NI State [Actions A5]

The state machine uses the following macros:

```
CouldAssert(*,G,I) =
    ( I in ( joins(*,*,RP(G)) ⊕ joins(*,G)
             ⊕ pim_include(*,G)) )
    AND (RPF_interface(RP(G)) ≠ I)
```

CouldAssert(*,G,I) is true on downstream interfaces for which we have (*,*,RP(G)) or (*,G) join state, or local members that requested any traffic destined for G.

```
AssertTrackingDesired(*,G,I) =
    CouldAssert(*,G,I)
    OR (local_receiver_include(*,G,I)==TRUE
        AND (I_am_DR(I) OR AssertWinner(*,G,I) == me))
    OR (RPF_interface(RP(G)) == I AND RPTJoinDesired(G))
```

AssertTrackingDesired(*,G,I) is true on any interface on which an (*,G) assert might affect our behavior.

Note that for reasons of compactness, "AssTrDes(*,G,I)" is used in the state machine table to refer to AssertTrackingDesired(*,G,I).

Terminology:

A "preferred assert" is one with a better metric than the current winner.

An "acceptable assert" is one that has a better metric than `my_assert_metric(*,G,I)`. An assert is never considered acceptable if its metric is infinite.

An "inferior assert" is one with a worse metric than `my_assert_metric(*,G,I)`. An assert is never considered inferior if `my_assert_metric(*,G,I)` is infinite.

Transitions from NoInfo State

When in NoInfo state, the following events trigger transitions, but only if the (S,G) assert state machine is in NoInfo state before and after consideration of the received message:

Receive Inferior Assert with RPTbit set AND CouldAssert(*,G,I)==TRUE

An Inferior (*,G) assert is received for G on Interface I. If CouldAssert(*,G,I) is TRUE, then I is our downstream interface, and we have (*,G) forwarding state on this interface, so we should be the assert winner. We transition to the "I am Assert Winner" state and perform Actions A1 (below).

A data packet destined for G arrives on interface I, AND CouldAssert(*,G,I)==TRUE

A data packet destined for G arrived on a downstream interface that is in our (*,G) outgoing interface list. We therefore believe we should be the forwarder for this (*,G), and so we transition to the "I am Assert Winner" state and perform Actions A1 (below).

Receive Acceptable Assert with RPT bit set AND AssertTrackingDesired(*,G,I)==TRUE

We're interested in (*,G) Asserts, either because I is a downstream interface for which we have (*,G) forwarding state, or because I is the upstream interface for RP(G) and we have (*,G) forwarding state. We get a (*,G) Assert that has a better metric than our own, so we do not win the Assert. We transition to "I am Assert Loser" and perform Actions A2 (below).

Transitions from "I am Assert Winner" State

When in "I am Assert Winner" state, the following events trigger transitions, but only if the (S,G) assert state machine is in NoInfo state before and after consideration of the received message:

Receive Inferior Assert

We receive a (*,G) assert that has a worse metric than our own. Whoever sent the assert has lost, and so we resend a (*,G) Assert and restart the Assert Timer (Actions A3 below).

Receive Preferred Assert

We receive a (*,G) assert that has a better metric than our own. We transition to "I am Assert Loser" state and perform Actions A2 (below).

When in "I am Assert Winner" state, the following events trigger transitions:

Assert Timer Expires

The (*,G) Assert Timer expires. As we're in the Winner state, then we must still have (*,G) forwarding state that is actively being kept alive. To prevent unnecessary thrashing of the forwarder and periodic flooding of duplicate packets, we resend the (*,G) Assert and restart the Assert Timer (Actions A3 below).

CouldAssert(*,G,I) → FALSE

Our (*,G) forwarding state or RPF interface changed so as to make CouldAssert(*,G,I) become false. We can no longer perform the actions of the assert winner, and so we transition to NoInfo state and perform Actions A4 (below).

Transitions from "I am Assert Loser" State

When in "I am Assert Loser" state, the following events trigger transitions, but only if the (S,G) assert state machine is in NoInfo state before and after consideration of the received message:

Receive Preferred Assert with RPTbit set

We receive a (*,G) assert that is better than that of the current assert winner. We stay in Loser state and perform Actions A2 below.

Receive Acceptable Assert from Current Winner with RPTbit set

We receive a (*,G) assert from the current assert winner that is better than our own metric for this group (although the metric may be worse than the winner's previous metric). We stay in Loser state and perform Actions A2 below.

Receive Inferior Assert or Assert Cancel from Current Winner

We receive an assert from the current assert winner that is worse than our own metric for this group (typically because the winner's metric became worse or is now an assert cancel). We transition to NoInfo state, delete this (*,G) assert state (Actions A5), and allow the normal PIM Join/Prune mechanisms to operate. Usually, we will eventually re-assert and win when data packets for G have started flowing again.

When in "I am Assert Loser" state, the following events trigger transitions:

Assert Timer Expires

The (*,G) Assert Timer expires. We transition to NoInfo state and delete this (*,G) assert info (Actions A5).

Current Winner's GenID Changes or NLT Expires

The Neighbor Liveness Timer associated with the current winner expires or we receive a Hello message from the current winner reporting a different GenID from the one it previously reported. This indicates that the current winner's interface or router has gone down (and may have come back up), and so we must assume it no longer knows it was the winner. We transition to the NoInfo state, deleting the (*,G) assert information (Actions A5).

AssertTrackingDesired(*,G,I)→FALSE

AssertTrackingDesired(*,G,I) becomes FALSE. Our forwarding state has changed so that (*,G) Asserts on interface I are no longer of interest to us. We transition to NoInfo state and delete this (*,G) assert info (Actions A5).

My metric becomes better than the assert winner's metric
My routing metric, rpt_assert_metric(G,I), has changed so that now my assert metric for (*,G) is better than the metric we have stored for current assert winner. We transition to NoInfo state, delete this (*,G) assert state (Actions A5), and allow the normal PIM Join/Prune mechanisms to operate. Usually, we will eventually re-assert and win when data packets for G have started flowing again.

RPF_interface(RP(G)) stops being interface I
Interface I used to be the RPF interface for RP(G), and now it is not. We transition to NoInfo state and delete this (*,G) assert state (Actions A5).

Receive Join(*,G) or Join(*,*,RP(G)) on interface I
We receive a Join(*,G) or a Join(*,*,RP(G)) that has the Upstream Neighbor Address field set to my primary IP address on interface I. The action is to transition to NoInfo state, delete this (*,G) assert state (Actions A5), and allow the normal PIM Join/Prune mechanisms to operate. If whoever sent the Join was in error, then the normal assert mechanism will eventually re-apply, and we will lose the assert again. However, whoever sent the assert may know that the previous assert winner has died, so we may end up being the new forwarder.

(*,G) Assert State machine Actions

A1: Send Assert(*,G).
Set Assert Timer to (Assert_Time - Assert_Override_Interval).
Store self as AssertWinner(*,G,I).
Store rpt_assert_metric(G,I) as AssertWinnerMetric(*,G,I).

A2: Store new assert winner as AssertWinner(*,G,I) and assert winner metric as AssertWinnerMetric(*,G,I).
Set Assert Timer to Assert_Time.

A3: Send Assert(*,G)
Set Assert Timer to (Assert_Time - Assert_Override_Interval).

A4: Send AssertCancel(*,G).
Delete assert info (AssertWinner(*,G,I) and AssertWinnerMetric(*,G,I) will then return their default values).

A5: Delete assert info (AssertWinner(*,G,I) and AssertWinnerMetric(*,G,I) will then return their default values).

Note that some of these actions may cause the value of JoinDesired(*,G) or RPF'(*,G)) to change, which could cause further transitions in other state machines.

4.6.3. Assert Metrics

Assert metrics are defined as:

```
struct assert_metric {
  rpt_bit_flag;
  metric_preference;
  route_metric;
  ip_address;
};
```

When comparing assert_metrics, the rpt_bit_flag, metric_preference, and route_metric field are compared in order, where the first lower value wins. If all fields are equal, the primary IP address of the router that sourced the Assert message is used as a tie-breaker, with the

highest IP address winning.

An assert metric for (S,G) to include in (or compare against) an Assert message sent on interface I should be computed using the following pseudocode:

```
assert_metric
my_assert_metric(S,G,I) {
    if( CouldAssert(S,G,I) == TRUE ) {
        return spt_assert_metric(S,I)
    } else if( CouldAssert(*,G,I) == TRUE ) {
        return rpt_assert_metric(G,I)
    } else {
        return infinite_assert_metric()
    }
}
```

`spt_assert_metric(S,I)` gives the assert metric we use if we're sending an assert based on active (S,G) forwarding state:

```
assert_metric
spt_assert_metric(S,I) {
   return {0,MRIB.pref(S),MRIB.metric(S),my_ip_address(I)}
}
```

`rpt_assert_metric(G,I)` gives the assert metric we use if we're sending an assert based only on (*,G) forwarding state:

```
assert_metric
rpt_assert_metric(G,I) {
    return {1,MRIB.pref(RP(G)),MRIB.metric(RP(G)),my_ip_address(I)}
}
```

`MRIB.pref(X)` and `MRIB.metric(X)` are the routing preference and routing metrics associated with the route to a particular (unicast) destination X, as determined by the MRIB. `my_ip_address(I)` is simply the router's primary IP address that is associated with the local interface I.

`infinite_assert_metric()` gives the assert metric we need to send an assert but don't match either (S,G) or (*,G) forwarding state:

```
assert_metric
infinite_assert_metric() {
     return {1,infinity,infinity,0}
}
```

4.6.4. AssertCancel Messages

An AssertCancel message is simply an RPT Assert message but with infinite metric. It is sent by the assert winner when it deletes the forwarding state that had caused the assert to occur. Other routers will see this metric, and it will cause any other router that has forwarding state to send its own assert, and to take over forwarding.

An AssertCancel(S,G) is an infinite metric assert with the RPT bit set that names S as the source.

An AssertCancel(*,G) is an infinite metric assert with the RPT bit set and the source set to zero.

AssertCancel messages are simply an optimization. The original Assert timeout mechanism will allow a subnet to eventually become consistent; the AssertCancel mechanism simply causes faster convergence. No special processing is required for an AssertCancel message, since it is simply an Assert message from the current winner.

4.6.5. Assert State Macros

The macros `lost_assert(S,G,rpt,I)`, `lost_assert(S,G,I)`, and `lost_assert(*,G,I)` are used in the olist computations of Section 4.1, and are defined as:

```
bool lost_assert(S,G,rpt,I) {
  if ( RPF_interface(RP(G)) == I  OR
       ( RPF_interface(S) == I AND SPTbit(S,G) == TRUE ) ) {
     return FALSE
  } else {
     return ( AssertWinner(S,G,I) ≠ NULL AND
              AssertWinner(S,G,I) ≠ me )
  }
}

bool lost_assert(S,G,I) {
  if ( RPF_interface(S) == I ) {
     return FALSE
  } else {
     return ( AssertWinner(S,G,I) ≠ NULL AND
              AssertWinner(S,G,I) ≠ me  AND
              (AssertWinnerMetric(S,G,I) is better
                 than spt_assert_metric(S,I) )
  }
}
```

Note: the term "AssertWinnerMetric(S,G,I) is better than spt_assert_metric(S,I)" is required to correctly handle the transition phase when a router has (S,G) join state, but has not yet set the SPT bit. In this case, it needs to ignore the assert state if it will win the assert once the SPTbit is set.

```
bool lost_assert(*,G,I) {
  if ( RPF_interface(RP(G)) == I ) {
     return FALSE
  } else {
     return ( AssertWinner(*,G,I) ≠ NULL AND
              AssertWinner(*,G,I) ≠ me )
  }
}
```

`AssertWinner(S,G,I)` is the IP source address of the Assert(S,G) packet that won an Assert.

`AssertWinner(*,G,I)` is the IP source address of the Assert(*,G) packet that won an Assert.

`AssertWinnerMetric(S,G,I)` is the Assert metric of the Assert(S,G) packet that won an Assert.

`AssertWinnerMetric(*,G,I)` is the Assert metric of the Assert(*,G) packet that won an Assert.

`AssertWinner(S,G,I)` defaults to NULL and `AssertWinnerMetric(S,G,I)` defaults to Infinity when in the NoInfo state.

Summary of Assert Rules and Rationale

This section summarizes the key rules for sending and reacting to asserts and the rationale for these rules. This section is not intended to be and should not be treated as a definitive specification of protocol behavior. The state machines and pseudocode should be consulted for that purpose. Rather, this section is intended to document important aspects of the Assert protocol behavior and to provide information that may prove helpful to the reader in understanding and implementing this part of the protocol.

1. Behavior: Downstream neighbors send Join(*,G) and Join(S,G) periodic messages to the appropriate RPF' neighbor, i.e., the RPF neighbor as modified by the assert process. They are not always sent to the RPF neighbor as indicated by the MRIB. Normal suppression and override rules apply.

   Rationale: By sending the periodic and triggered Join messages to the RPF' neighbor instead of to the RPF neighbor, the downstream router avoids re-triggering the Assert process with every Join. A side effect of sending Joins to the Assert winner is that traffic will not switch back to the "normal" RPF neighbor until the Assert times out. This will not happen until data stops flowing, if item 8, below, is implemented.

2. Behavior: The assert winner for (*,G) acts as the local DR for (*,G) on behalf of IGMP/MLD members.

   Rationale: This is required to allow a single router to merge PIM and IGMP/MLD joins and leaves. Without this, overrides don't work.

3. Behavior: The assert winner for (S,G) acts as the local DR for (S,G) on behalf of IGMPv3 members.

   Rationale: Same rationale as for item 2.

4. Behavior: (S,G) and (*,G) prune overrides are sent to the RPF' neighbor and not to the regular RPF neighbor.

   Rationale: Same rationale as for item 1.

5. Behavior: An (S,G,rpt) prune override is not sent (at all) if RPF'(S,G,rpt) ≠ RPF'(*,G).

   Rationale: This avoids keeping state alive on the (S,G) tree when only (*,G) downstream members are left. Also, it avoids sending (S,G,rpt) joins to a router that is not on the (*,G) tree. This behavior might be confusing although this specification does indicate that such a join should be dropped.

6. Behavior: An assert loser that receives a Join(S,G) with an Upstream Neighbor Address that is its primary IP address on that interface cancels the (S,G) Assert Timer.

   Rationale: This is necessary in order to have rapid convergence in the event that the downstream router that initially sent a join to the prior Assert winner has undergone a topology change.

7. Behavior: An assert loser that receives a Join(*,G) or a Join(*,*,RP(G)) with an Upstream Neighbor Address that is its primary IP address on that interface cancels the (*,G) Assert Timer and all (S,G) assert timers that do not have corresponding Prune(S,G,rpt) messages in the compound Join/Prune message.

Rationale: Same rationale as for item 6.

8. Behavior: An assert winner for (*,G) or (S,G) sends a canceling assert when it is about to stop forwarding on a (*,G) or an (S,G) entry. This behavior does not apply to (S,G,rpt).

   Rationale: This allows switching back to the shared tree after the last SPT router on the LAN leaves. Doing this prevents downstream routers on the shared tree from keeping SPT state alive.

9. Behavior: Resend the assert messages before timing out an assert. (This behavior is optional.)

   Rationale: This prevents the periodic duplicates that would otherwise occur each time that an assert times out and is then re-established.

10. Behavior: When RPF'(S,G,rpt) changes to be the same as RPF'(*,G) we need to trigger a Join(S,G,rpt) to RPF'(*,G).

    Rationale: This allows switching back to the RPT after the last SPT member leaves.

4.7. PIM Bootstrap and RP Discovery

For correct operation, every PIM router within a PIM domain must be able to map a particular multicast group address to the same RP. If this is not the case, then black holes may appear, where some receivers in the domain cannot receive some groups. A domain in this context is a contiguous set of routers that all implement PIM and are configured to operate within a common boundary.

A notable exception to this is where a PIM domain is broken up into multiple administrative scope regions; these are regions where a border has been configured so that a range of multicast groups will not be forwarded across that border. For more information on Administratively Scoped IP Multicast, see RFC 2365. The modified criteria for admin-scoped regions are that the region is convex with respect to forwarding based on the MRIB, and that all PIM routers within the scope region map scoped groups to the same RP within that region.

This specification does not mandate the use of a single mechanism to provide routers with the information to perform the group-to-RP mapping. Currently four mechanisms are possible, and all four have associated problems:

Static Configuration

A PIM router MUST support the static configuration of group-to-RP mappings. Such a mechanism is not robust to failures, but does at least provide a basic interoperability mechanism.

Embedded-RP

Embedded-RP defines an address allocation policy in which the address of the Rendezvous Point (RP) is encoded in an IPv6 multicast group address [17].

Cisco's Auto-RP

Auto-RP uses a PIM Dense-Mode multicast group to announce group-to-RP mappings from a central location. This mechanism is not useful if PIM Dense-Mode is not being run in parallel with PIM Sparse-Mode, and was only intended for use with PIM Sparse-Mode Version 1. No standard specification currently exists.

BootStrap Router (BSR)

RFC 2362 specifies a bootstrap mechanism based on the automatic election of a bootstrap router (BSR). Any router in the domain that is configured to be a possible RP reports its candidacy to the BSR, and then a domain-wide flooding mechanism distributes the BSR's chosen set of RPs throughout the domain. As specified in RFC

2362, BSR is flawed in its handling of admin-scoped regions that are smaller than a PIM domain, but the mechanism does work for global-scoped groups.

As far as PIM-SM is concerned, the only important requirement is that all routers in the domain (or admin scope zone for scoped regions) receive the same set of group-range-to-RP mappings. This may be achieved through the use of any of these mechanisms, or through alternative mechanisms not currently specified.

It must be operationally ensured that any RP address configured, learned, or advertised is reachable from all routers in the PIM domain.

4.7.1. Group-to-RP Mapping

Using one of the mechanisms described above, a PIM router receives one or more possible group-range-to-RP mappings. Each mapping specifies a range of multicast groups (expressed as a group and mask) and the RP to which such groups should be mapped. Each mapping may also have an associated priority. It is possible to receive multiple mappings, all of which might match the same multicast group; this is the common case with BSR. The algorithm for performing the group-to-RP mapping is as follows:

1. Perform longest match on group-range to obtain a list of RPs.
2. From this list of matching RPs, find the one with highest priority. Eliminate any RPs from the list that have lower priorities.
3. If only one RP remains in the list, use that RP.
4. If multiple RPs are in the list, use the PIM hash function to choose one.

Thus, if two or more group-range-to-RP mappings cover a particular group, the one with the longest mask is the mapping to use. If the mappings have the same mask length, then the one with the highest priority is chosen. If there is more than one matching entry with the same longest mask and the priorities are identical, then a hash function (see Section 4.7.2) is applied to choose the RP.

This algorithm is invoked by a DR when it needs to determine an RP for a given group, e.g., upon reception of a packet or IGMP/MLD membership indication for a group for which the DR does not know the RP. It is invoked by any router that has (*,*,RP) state when a packet is received for which there is no corresponding (S,G) or (*,G) entry. Furthermore, the mapping function is invoked by all routers upon receiving a (*,G) or (*,*,RP) Join/Prune message.

Note that if the set of possible group-range-to-RP mappings changes, each router will need to check whether any existing groups are affected. This may, for example, cause a DR or acting DR to re-join a group, or cause it to restart register encapsulation to the new RP.

Implementation note: the bootstrap mechanism described in RFC 2362 omitted step 1 above. However, of the implementations we are aware of, approximately half performed step 1 anyway. Note that implementations of BSR that omit step 1 will not correctly interoperate with implementations of this specification when used with the BSR mechanism described in [11].

4.7.2. Hash Function

The hash function is used by all routers within a domain, to map a group to one of the RPs from the matching set of group-range-to-RP mappings (this set all have the same longest mask length and same highest priority). The algorithm takes as input the group address, and the addresses of the candidate RPs from the mappings, and gives as output one RP address to be used.

The protocol requires that all routers hash to the same RP within a domain (except for transients). The following hash function must be used in each router:

1. For RP addresses in the matching group-range-to-RP mappings, compute a value:

   Value(G,M,C(i))=
   (1103515245 * ((1103515245 * (G&M)+12345) XOR C(i)) + 12345) mod 2^31

   where C(i) is the RP address and M is a hash-mask. If BSR is being used, the hash-mask is given in the Bootstrap messages. If BSR is not being used, the alternative mechanism that supplies the group-range-to-RP mappings may supply the value, or else it defaults to a mask with the most significant 30 bits being one for IPv4 and the most significant 126 bits being one for IPv6. The hash-mask allows a small number of consecutive groups (e.g., 4) to always hash to the same RP. For instance, hierarchically-encoded data can be sent on consecutive group addresses to get the same delay and fate-sharing characteristics.

   For address families other than IPv4, a 32-bit digest to be used as C(i) and G must first be derived from the actual RP or group address. Such a digest method must be used consistently throughout the PIM domain. For IPv6 addresses, we recommend using the equivalent IPv4 address for an IPv4-compatible address, and the exclusive-or of each 32-bit segment of the address for all other IPv6 addresses. For example, the digest of the IPv6 address 3ffe:b00:c18:1::10 would be computed as 0x3ffe0b00 ^ 0x0c180001 ^ 0x00000000 ^ 0x00000010, where ^ represents the exclusive-or operation.

2. The candidate RP with the highest resulting hash value is then the RP chosen by this Hash Function. If more than one RP has the same highest hash value, the RP with the highest IP address is chosen.

4.8. Source-Specific Multicast

The Source-Specific Multicast (SSM) service model [6] can be implemented with a strict subset of the PIM-SM protocol mechanisms. Both regular IP Multicast and SSM semantics can coexist on a single router, and both can be implemented using the PIM-SM protocol. A range of multicast addresses, currently 232.0.0.0/8 in IPv4 and FF3x::/32 for IPv6, is reserved for SSM, and the choice of semantics is determined by the multicast group address in both data packets and PIM messages.

4.8.1. Protocol Modifications for SSM Destination Addresses

The following rules override the normal PIM-SM behavior for a multicast address G in the SSM range:

- A router MUST NOT send a (*,G) Join/Prune message for any reason.
- A router MUST NOT send an (S,G,rpt) Join/Prune message for any reason.
- A router MUST NOT send a Register message for any packet that is destined to an SSM address.
- A router MUST NOT forward packets based on (*,G) or (S,G,rpt) state. The (*,G)- and (S,G,rpt)-related state summarization macros are NULL for any SSM address, for the purposes of packet forwarding.
- A router acting as an RP MUST NOT forward any Register-encapsulated packet that has an SSM destination address.

The last two rules are present to deal with "legacy" routers unaware of SSM that may be sending (*,G) and (S,G,rpt) Join/Prunes, or Register messages for SSM destination addresses.

Additionally:

- A router MAY be configured to advertise itself as a Candidate RP for an SSM address. If so, it SHOULD respond with a Register-Stop message to any Register message containing a packet destined for an SSM address.
- A router MAY optimize out the creation and maintenance of (S,G,rpt) and (*,G) state for SSM destination addresses -- this state is not needed for SSM packets.

4.8.2. PIM-SSM-Only Routers

An implementer may choose to implement only the subset of PIM Sparse-Mode that provides SSM forwarding semantics.

A PIM-SSM-only router MUST implement the following portions of this specification:

- Upstream (S,G) state machine (Section 4.5.7)
- Downstream (S,G) state machine (Section 4.5.3)
- (S,G) Assert state machine (Section 4.6.1)
- Hello messages, neighbor discovery, and DR election (Section 4.3)
- Packet forwarding rules (Section 4.2)

A PIM-SSM-only router does not need to implement the following protocol elements:

- Register state machine (Section 4.4)
- (*,G), (S,G,rpt), and (*,*,RP) Downstream state machines (Sections 4.5.2, 4.5.4, and 4.5.1)
- (*,G), (S,G,rpt), and (*,*,RP) Upstream state machines (Sections 4.5.6, 4.5.8, and 4.5.5)
- (*,G) Assert state machine (Section 4.6.2)
- Bootstrap RP Election (Section 4.7)
- Keepalive Timer
- SPTbit (Section 4.2.2)

The `Keepalive Timer` should be treated as always running, and `SPTbit` should be treated as always being set for an SSM address.

Additionally, the Packet forwarding rules of Section 4.2 can be simplified in a PIM-SSM-only router:

```
if( iif == RPF_interface(S) AND UpstreamJPState(S,G) == Joined ) {
      oiflist = inherited_olist(S,G)
   } else if( iif is in inherited_olist(S,G) ) {
      send Assert(S,G) on iif
   }

   oiflist = oiflist ⊖ iif
   forward packet on all interfaces in oiflist
```

This is nothing more than the reduction of the normal PIM-SM forwarding rule, with all (S,G,rpt) and (*,G) clauses replaced with NULL.

4.9. PIM Packet Formats

This section describes the details of the packet formats for PIM control messages.

All PIM control messages have IP protocol number 103.

PIM messages are either unicast (e.g., Registers and Register-Stop) or multicast with TTL 1 to the 'ALL-PIM-ROUTERS' group (e.g., Join/Prune, Asserts, etc.). The source address used for unicast messages is a domain-wide reachable address; the source address used for multicast messages is the link-local address of the interface on which the message is being sent.

The IPv4 'ALL-PIM-ROUTERS' group is '224.0.0.13'. The IPv6 'ALL-PIM-ROUTERS' group is 'ff02::d'.

The PIM header common to all PIM messages is:

```
 0                   1                   2                   3
 0 1 2 3 4 5 6 7 8 9 0 1 2 3 4 5 6 7 8 9 0 1 2 3 4 5 6 7 8 9 0 1
+-+-+-+-+-+-+-+-+-+-+-+-+-+-+-+-+-+-+-+-+-+-+-+-+-+-+-+-+-+-+-+-+
|PIM Ver| Type  |   Reserved    |           Checksum            |
+-+-+-+-+-+-+-+-+-+-+-+-+-+-+-+-+-+-+-+-+-+-+-+-+-+-+-+-+-+-+-+-+
```

PIM Ver

PIM Version number is 2.

Type

Types for specific PIM messages. PIM Types are:

Message Type	Destination
0 = Hello	Multicast to ALL-PIM-ROUTERS
1 = Register	Unicast to RP
2 = Register-Stop	Unicast to source of Register packet
3 = Join/Prune	Multicast to ALL-PIM-ROUTERS
4 = Bootstrap	Multicast to ALL-PIM-ROUTERS
5 = Assert	Multicast to ALL-PIM-ROUTERS
6 = Graft (used in PIM-DM only)	Unicast to RPF'(S)
7 = Graft-Ack (used in PIM-DM only)	Unicast to source of Graft packet
8 = Candidate-RP-Advertisement	Unicast to Domain's BSR

Reserved

Set to zero on transmission. Ignored upon receipt.

Checksum

The checksum is a standard IP checksum, i.e., the 16-bit one's complement of the one's complement sum of the entire PIM message, excluding the "Multicast data packet" section of the Register message. For computing the checksum, the checksum field is zeroed. If the packet's length is not an integral number of 16-bit words, the packet is padded with a trailing byte of zero before performing the checksum.

For IPv6, the checksum also includes the IPv6 "pseudo-header", as specified in RFC 2460, Section 8.1 [5]. This "pseudo-header" is prepended to the PIM header for the purposes of calculating the checksum. The "Upper-Layer Packet Length" in the pseudo-header is set to the length of the PIM message, except in Register messages where it is set to the length of the PIM register header (8). The Next Header value used in the pseudo-header is 103.

If a message is received with an unrecognized PIM Ver or Type field, or if a message's destination does not correspond to the table above, the message MUST be discarded, and an error message SHOULD be logged to the administrator in a rate-limited manner.

4.9.1. Encoded Source and Group Address Formats

Encoded-Unicast Address

An Encoded-Unicast address takes the following format:

```
 0                   1                   2                   3
 0 1 2 3 4 5 6 7 8 9 0 1 2 3 4 5 6 7 8 9 0 1 2 3 4 5 6 7 8 9 0 1
+-+-+-+-+-+-+-+-+-+-+-+-+-+-+-+-+-+-+-+-+-+-+-+-+-+-+-+-+-+-+-+-+
|  Addr Family  | Encoding Type |     Unicast Address
+-+-+-+-+-+-+-+-+-+-+-+-+-+-+-+-+-+-+-+-+-+-+-+-+-+-+-+-+-+-+...
```

Addr Family

The PIM address family of the 'Unicast Address' field of this address.

Values 0-127 are as assigned by the IANA for Internet Address Families in [7]. Values 128-250 are reserved to be assigned by the IANA for PIM-specific Address Families. Values 251 though 255 are designated for private use. As there is no assignment authority for this space, collisions should be expected.

Encoding Type

The type of encoding used within a specific Address Family. The value '0' is reserved for this field and represents the native encoding of the Address Family.

Unicast Address

The unicast address as represented by the given Address Family and Encoding Type.

Encoded-Group Address

Encoded-Group addresses take the following format:

```
 0                   1                   2                   3
 0 1 2 3 4 5 6 7 8 9 0 1 2 3 4 5 6 7 8 9 0 1 2 3 4 5 6 7 8 9 0 1
+-+-+-+-+-+-+-+-+-+-+-+-+-+-+-+-+-+-+-+-+-+-+-+-+-+-+-+-+-+-+-+-+
|  Addr Family  | Encoding Type |B| Reserved  |Z|  Mask Len     |
+-+-+-+-+-+-+-+-+-+-+-+-+-+-+-+-+-+-+-+-+-+-+-+-+-+-+-+-+-+-+-+-+
|                Group multicast Address
+-+-+-+-+-+-+-+-+-+-+-+-+-+-+-+-+-+-+-+-+-+-+-+...
```

Addr Family
Described above.

Encoding Type
Described above.

[B]idirectional PIM
Indicates the group range should use Bidirectional PIM [13]. For PIM-SM defined in this specification, this bit MUST be zero.

Reserved
Transmitted as zero. Ignored upon receipt.

Admin Scope [Z]one
indicates the group range is an admin scope zone. This is used in the Bootstrap Router Mechanism [11] only. For all other purposes, this bit is set to zero and ignored on receipt.

Mask Len
The Mask length field is 8 bits. The value is the number of contiguous one bits that are left justified and used as a mask; when combined with the group address, it describes a range of groups. It is less than or equal to the address length in bits for the given Address Family and Encoding Type. If the message is sent for a single group, then the Mask length must equal the address length in bits for the given Address Family and Encoding Type (e.g., 32 for IPv4 native encoding, 128 for IPv6 native encoding).

Group multicast Address
Contains the group address.

Encoded-Source Address

Encoded-Source address takes the following format:

```
 0                   1                   2                   3
 0 1 2 3 4 5 6 7 8 9 0 1 2 3 4 5 6 7 8 9 0 1 2 3 4 5 6 7 8 9 0 1
+-+-+-+-+-+-+-+-+-+-+-+-+-+-+-+-+-+-+-+-+-+-+-+-+-+-+-+-+-+-+-+-+
| Addr Family   | Encoding Type | Rsrvd   |S|W|R|  Mask Len     |
+-+-+-+-+-+-+-+-+-+-+-+-+-+-+-+-+-+-+-+-+-+-+-+-+-+-+-+-+-+-+-+-+
|                         Source Address
+-+-+-+-+-+-+-+-+-+-+-+-+-+-+-+-+-+-+-+-+-+-+-+...
```

Addr Family
Described above.

Encoding Type
Described above.

Reserved
Transmitted as zero, ignored on receipt.

S The Sparse bit is a 1-bit value, set to 1 for PIM-SM. It is used for PIM version 1 compatibility.

W The WC (or WildCard) bit is a 1-bit value for use with PIM Join/Prune messages (see Section 4.9.5.1).

R The RPT (or Rendezvous Point Tree) bit is a 1-bit value for use with PIM Join/Prune messages (see Section 4.9.5.1). If the WC bit is 1, the RPT bit MUST be 1.

Mask Len
The mask length field is 8 bits. The value is the number of contiguous one bits left justified used as a mask which, combined with the Source Address, describes a source subnet. The mask length MUST be equal to the mask length in bits for the given Address Family and Encoding Type (32 for IPv4 native and 128 for IPv6 native). A router SHOULD ignore any messages received with any other mask length.

Source Address
The source address.

4.9.2. Hello Message Format

It is sent periodically by routers on all interfaces.

```
 0                   1                   2                   3
 0 1 2 3 4 5 6 7 8 9 0 1 2 3 4 5 6 7 8 9 0 1 2 3 4 5 6 7 8 9 0 1
+-+-+-+-+-+-+-+-+-+-+-+-+-+-+-+-+-+-+-+-+-+-+-+-+-+-+-+-+-+-+-+-+
|PIM Ver| Type  |   Reserved    |           Checksum            |
+-+-+-+-+-+-+-+-+-+-+-+-+-+-+-+-+-+-+-+-+-+-+-+-+-+-+-+-+-+-+-+-+
|          OptionType           |         OptionLength          |
+-+-+-+-+-+-+-+-+-+-+-+-+-+-+-+-+-+-+-+-+-+-+-+-+-+-+-+-+-+-+-+-+
|                           OptionValue                         |
|                               ...                             |
+-+-+-+-+-+-+-+-+-+-+-+-+-+-+-+-+-+-+-+-+-+-+-+-+-+-+-+-+-+-+-+-+
|                               .                               |
|                               .                               |
|                               .                               |
+-+-+-+-+-+-+-+-+-+-+-+-+-+-+-+-+-+-+-+-+-+-+-+-+-+-+-+-+-+-+-+-+
|          OptionType           |         OptionLength          |
+-+-+-+-+-+-+-+-+-+-+-+-+-+-+-+-+-+-+-+-+-+-+-+-+-+-+-+-+-+-+-+-+
|                           OptionValue                         |
|                               ...                             |
+-+-+-+-+-+-+-+-+-+-+-+-+-+-+-+-+-+-+-+-+-+-+-+-+-+-+-+-+-+-+-+-+
```

PIM Version, Type, Reserved, Checksum
Described in Section 4.9.

OptionType
The type of the option given in the following OptionValue field.

OptionLength
The length of the OptionValue field in bytes.

OptionValue

A variable length field, carrying the value of the option.

The Option fields may contain the following values:

- OptionType 1: Holdtime

```
 0                   1                   2                   3
 0 1 2 3 4 5 6 7 8 9 0 1 2 3 4 5 6 7 8 9 0 1 2 3 4 5 6 7 8 9 0 1
+-+-+-+-+-+-+-+-+-+-+-+-+-+-+-+-+-+-+-+-+-+-+-+-+-+-+-+-+-+-+-+-+
|          Type = 1             |         Length = 2            |
+-+-+-+-+-+-+-+-+-+-+-+-+-+-+-+-+-+-+-+-+-+-+-+-+-+-+-+-+-+-+-+-+
|          Holdtime             |
+-+-+-+-+-+-+-+-+-+-+-+-+-+-+-+-+
```

  Holdtime is the amount of time a receiver must keep the neighbor reachable, in seconds. If the Holdtime is set to '0xffff', the receiver of this message never times out the neighbor. This may be used with dial-on-demand links, to avoid keeping the link up with periodic Hello messages.

Hello messages with a Holdtime value set to '0' are also sent by a router on an interface about to go down or changing IP address (see Section 4.3.1). These are effectively goodbye messages, and the receiving routers should immediately time out the neighbor information for the sender.

- OptionType 2: LAN Prune Delay

```
 0                   1                   2                   3
 0 1 2 3 4 5 6 7 8 9 0 1 2 3 4 5 6 7 8 9 0 1 2 3 4 5 6 7 8 9 0 1
+-+-+-+-+-+-+-+-+-+-+-+-+-+-+-+-+-+-+-+-+-+-+-+-+-+-+-+-+-+-+-+-+
|          Type = 2             |          Length = 4           |
+-+-+-+-+-+-+-+-+-+-+-+-+-+-+-+-+-+-+-+-+-+-+-+-+-+-+-+-+-+-+-+-+
|T|      Propagation_Delay      |      Override_Interval        |
+-+-+-+-+-+-+-+-+-+-+-+-+-+-+-+-+-+-+-+-+-+-+-+-+-+-+-+-+-+-+-+-+
```

  The LAN Prune Delay option is used to tune the prune propagation delay on multi-access LANs. The T bit specifies the ability of the sending router to disable joins suppression. Propagation_Delay and Override_Interval are time intervals in units of milliseconds. A router originating a LAN Prune Delay option on interface I sets the Propagation_Delay field to the configured value of Propagation_Delay(I) and the value of the Override_Interval field to the value of Override_Interval(I). On a receiving router, the values of the fields are used to tune the value of the Effective_Override_Interval(I) and its derived timer values. Section 4.3.3 describes how these values affect the behavior of a router.

- OptionType 3 to 16: reserved to be defined in future versions of this document.
- OptionType 18: deprecated and should not be used.

- OptionType 19: DR Priority

```
 0                   1                   2                   3
 0 1 2 3 4 5 6 7 8 9 0 1 2 3 4 5 6 7 8 9 0 1 2 3 4 5 6 7 8 9 0 1
+-+-+-+-+-+-+-+-+-+-+-+-+-+-+-+-+-+-+-+-+-+-+-+-+-+-+-+-+-+-+-+-+
|          Type = 19            |          Length = 4           |
+-+-+-+-+-+-+-+-+-+-+-+-+-+-+-+-+-+-+-+-+-+-+-+-+-+-+-+-+-+-+-+-+
|                         DR Priority                           |
+-+-+-+-+-+-+-+-+-+-+-+-+-+-+-+-+-+-+-+-+-+-+-+-+-+-+-+-+-+-+-+-+
```

  DR Priority is a 32-bit unsigned number and should be considered in the DR election as described in Section 4.3.2.

- OptionType 20: Generation ID

```
 0                   1                   2                   3
 0 1 2 3 4 5 6 7 8 9 0 1 2 3 4 5 6 7 8 9 0 1 2 3 4 5 6 7 8 9 0 1
+-+-+-+-+-+-+-+-+-+-+-+-+-+-+-+-+-+-+-+-+-+-+-+-+-+-+-+-+-+-+-+-+
|          Type = 20            |          Length = 4           |
+-+-+-+-+-+-+-+-+-+-+-+-+-+-+-+-+-+-+-+-+-+-+-+-+-+-+-+-+-+-+-+-+
|                       Generation ID                           |
+-+-+-+-+-+-+-+-+-+-+-+-+-+-+-+-+-+-+-+-+-+-+-+-+-+-+-+-+-+-+-+-+
```

  Generation ID is a random 32-bit value for the interface on which the Hello message is sent. The Generation ID is regenerated whenever PIM forwarding is started or restarted on the interface.

- OptionType 24: Address List

```
 0                   1                   2                   3
 0 1 2 3 4 5 6 7 8 9 0 1 2 3 4 5 6 7 8 9 0 1 2 3 4 5 6 7 8 9 0 1
+-+-+-+-+-+-+-+-+-+-+-+-+-+-+-+-+-+-+-+-+-+-+-+-+-+-+-+-+-+-+-+-+
|          Type = 24            |      Length = <Variable>      |
+-+-+-+-+-+-+-+-+-+-+-+-+-+-+-+-+-+-+-+-+-+-+-+-+-+-+-+-+-+-+-+-+
|         Secondary Address 1 (Encoded-Unicast format)          |
+-+-+-+-+-+-+-+-+-+-+-+-+-+-+-+-+-+-+-+-+-+-+-+-+-+-+-+-+-+-+-+-+
                                ...
+-+-+-+-+-+-+-+-+-+-+-+-+-+-+-+-+-+-+-+-+-+-+-+-+-+-+-+-+-+-+-+-+
|         Secondary Address N (Encoded-Unicast format)          |
+-+-+-+-+-+-+-+-+-+-+-+-+-+-+-+-+-+-+-+-+-+-+-+-+-+-+-+-+-+-+-+-+
```

  The contents of the Address List Hello option are described in Section 4.3.4. All addresses within a single Address List must belong to the same address family.

OptionTypes 17 through 65000 are assigned by the IANA. OptionTypes 65001 through 65535 are reserved for Private Use, as defined in [9].
Unknown options MUST be ignored and MUST NOT prevent a neighbor relationship from being formed. The "Holdtime" option MUST be implemented; the "DR Priority" and "Generation ID" options SHOULD be implemented. The "Address List" option MUST be implemented for IPv6.

4.9.3. Register Message Format

A Register message is sent by the DR or a PMBR to the RP when a multicast packet needs to be transmitted on the RP-tree. The IP source address is set to the address of the DR, the destination address to the RP's address. The IP TTL of the PIM packet is the system's normal unicast TTL.

```
 0                   1                   2                   3
 0 1 2 3 4 5 6 7 8 9 0 1 2 3 4 5 6 7 8 9 0 1 2 3 4 5 6 7 8 9 0 1
+-+-+-+-+-+-+-+-+-+-+-+-+-+-+-+-+-+-+-+-+-+-+-+-+-+-+-+-+-+-+-+-+
|PIM Ver| Type  |   Reserved    |           Checksum            |
+-+-+-+-+-+-+-+-+-+-+-+-+-+-+-+-+-+-+-+-+-+-+-+-+-+-+-+-+-+-+-+-+
|B|N|                       Reserved2                           |
+-+-+-+-+-+-+-+-+-+-+-+-+-+-+-+-+-+-+-+-+-+-+-+-+-+-+-+-+-+-+-+-+
|                                                               |
.                      Multicast data packet                    .
|                                                               |
+-+-+-+-+-+-+-+-+-+-+-+-+-+-+-+-+-+-+-+-+-+-+-+-+-+-+-+-+-+-+-+-+
```

PIM Version, Type, Reserved, Checksum

Described in Section 4.9. Note that in order to reduce encapsulation overhead, the checksum for Registers is done only on the first 8 bytes of the packet, including the PIM header and the next 4 bytes, excluding the data packet portion. For interoperability reasons, a message carrying a checksum calculated over the entire PIM Register message should also be accepted. When calculating the checksum, the IPv6 pseudoheader "Upper-Layer Packet Length" is set to 8.

B The Border bit. If the router is a DR for a source that it is directly connected to, it sets the B bit to 0. If the router is a PMBR for a source in a directly connected cloud, it sets the B bit to 1.

N The Null-Register bit. Set to 1 by a DR that is probing the RP before expiring its local Register-Suppression Timer. Set to 0 otherwise.

Reserved2

Transmitted as zero, ignored on receipt.

Multicast data packet

The original packet sent by the source. This packet must be of the same address family as the encapsulating PIM packet, e.g., an IPv6 data packet must be encapsulated in an IPv6 PIM packet. Note that the TTL of the original packet is decremented before encapsulation, just like any other packet that is forwarded. In addition, the RP decrements the TTL after decapsulating, before forwarding the packet down the shared tree.

For (S,G) Null-Registers, the Multicast data packet portion contains a dummy IP header with S as the source address, G as the destination address. When generating an IPv4 Null-Register message, the fields in the dummy IPv4 header SHOULD be filled in according to the following table. Other IPv4 header fields may contain any value that is valid for that field.

Field	Value
IP Version	4
Header Length	5
Checksum	Header checksum
Fragmentation offset	0
More Fragments	0
Total Length	20
IP Protocol	103 (PIM)

On receipt of an (S,G) Null-Register, if the Header Checksum field is non-zero, the recipient SHOULD check the checksum and discard null registers that have a bad checksum. The recipient SHOULD NOT check the value of any individual fields; a correct IP header checksum is sufficient. If the Header Checksum field is zero, the recipient MUST NOT check the checksum.

With IPv6, an implementation generates a dummy IP header followed by a dummy PIM header with values according to the following table in addition to the source and group. Other IPv6 header fields may contain any value that is valid for that field.

Header Field	Value
IP Version	6
Next Header	103 (PIM)
Length	4
PIM Version	0
PIM Type	0
PIM Reserved	0
PIM Checksum	PIM checksum including IPv6 "pseudo-header"; see Section 4.9

On receipt of an IPv6 (S,G) Null-Register, if the dummy PIM header is present, the recipient SHOULD check the checksum and discard Null-Registers that have a bad checksum.

4.9.4. Register-Stop Message Format

A Register-Stop is unicast from the RP to the sender of the Register message. The IP source address is the address to which the register was addressed. The IP destination address is the source address of the register message.

```
 0                   1                   2                   3
 0 1 2 3 4 5 6 7 8 9 0 1 2 3 4 5 6 7 8 9 0 1 2 3 4 5 6 7 8 9 0 1
+-+-+-+-+-+-+-+-+-+-+-+-+-+-+-+-+-+-+-+-+-+-+-+-+-+-+-+-+-+-+-+-+
|PIM Ver| Type  |   Reserved    |           Checksum            |
+-+-+-+-+-+-+-+-+-+-+-+-+-+-+-+-+-+-+-+-+-+-+-+-+-+-+-+-+-+-+-+-+
|             Group Address (Encoded-Group format)              |
+-+-+-+-+-+-+-+-+-+-+-+-+-+-+-+-+-+-+-+-+-+-+-+-+-+-+-+-+-+-+-+-+
|            Source Address (Encoded-Unicast format)            |
+-+-+-+-+-+-+-+-+-+-+-+-+-+-+-+-+-+-+-+-+-+-+-+-+-+-+-+-+-+-+-+-+
```

PIM Version, Type, Reserved, Checksum

Described in Section 4.9.

Group Address

The group address from the multicast data packet in the Register. Format described in Section 4.9.1. Note that for Register-Stops the Mask Len field contains the full address length * 8 (e.g., 32 for IPv4 native encoding), if the message is sent for a single group.

Source Address

The host address of the source from the multicast data packet in the register. The format for this address is given in the Encoded-Unicast address in Section 4.9.1. A special wild card value consisting of an address field of all zeros can be used to indicate any source.

4.9.5. Join/Prune Message Format

A Join/Prune message is sent by routers towards upstream sources and RPs. Joins are sent to build shared trees (RP trees) or source trees (SPT). Prunes are sent to prune source trees when members leave groups as well as sources that do not use the shared tree.

```
 0                   1                   2                   3
 0 1 2 3 4 5 6 7 8 9 0 1 2 3 4 5 6 7 8 9 0 1 2 3 4 5 6 7 8 9 0 1
+-+-+-+-+-+-+-+-+-+-+-+-+-+-+-+-+-+-+-+-+-+-+-+-+-+-+-+-+-+-+-+-+
|PIM Ver| Type  |   Reserved    |           Checksum            |
+-+-+-+-+-+-+-+-+-+-+-+-+-+-+-+-+-+-+-+-+-+-+-+-+-+-+-+-+-+-+-+-+
|        Upstream Neighbor Address (Encoded-Unicast format)     |
+-+-+-+-+-+-+-+-+-+-+-+-+-+-+-+-+-+-+-+-+-+-+-+-+-+-+-+-+-+-+-+-+
|  Reserved     | Num groups    |          Holdtime             |
+-+-+-+-+-+-+-+-+-+-+-+-+-+-+-+-+-+-+-+-+-+-+-+-+-+-+-+-+-+-+-+-+
|         Multicast Group Address 1 (Encoded-Group format)      |
+-+-+-+-+-+-+-+-+-+-+-+-+-+-+-+-+-+-+-+-+-+-+-+-+-+-+-+-+-+-+-+-+
|   Number of Joined Sources    |   Number of Pruned Sources    |
+-+-+-+-+-+-+-+-+-+-+-+-+-+-+-+-+-+-+-+-+-+-+-+-+-+-+-+-+-+-+-+-+
|        Joined Source Address 1 (Encoded-Source format)        |
+-+-+-+-+-+-+-+-+-+-+-+-+-+-+-+-+-+-+-+-+-+-+-+-+-+-+-+-+-+-+-+-+
|                               .                               |
|                               .                               |
+-+-+-+-+-+-+-+-+-+-+-+-+-+-+-+-+-+-+-+-+-+-+-+-+-+-+-+-+-+-+-+-+
|        Joined Source Address n (Encoded-Source format)        |
+-+-+-+-+-+-+-+-+-+-+-+-+-+-+-+-+-+-+-+-+-+-+-+-+-+-+-+-+-+-+-+-+
|        Pruned Source Address 1 (Encoded-Source format)        |
+-+-+-+-+-+-+-+-+-+-+-+-+-+-+-+-+-+-+-+-+-+-+-+-+-+-+-+-+-+-+-+-+
|                               .                               |
|                               .                               |
+-+-+-+-+-+-+-+-+-+-+-+-+-+-+-+-+-+-+-+-+-+-+-+-+-+-+-+-+-+-+-+-+
|        Pruned Source Address n (Encoded-Source format)        |
+-+-+-+-+-+-+-+-+-+-+-+-+-+-+-+-+-+-+-+-+-+-+-+-+-+-+-+-+-+-+-+-+
|                             .                                 |
|                             .                                 |
+-+-+-+-+-+-+-+-+-+-+-+-+-+-+-+-+-+-+-+-+-+-+-+-+-+-+-+-+-+-+-+-+
|         Multicast Group Address m (Encoded-Group format)      |
+-+-+-+-+-+-+-+-+-+-+-+-+-+-+-+-+-+-+-+-+-+-+-+-+-+-+-+-+-+-+-+-+
|   Number of Joined Sources    |   Number of Pruned Sources    |
+-+-+-+-+-+-+-+-+-+-+-+-+-+-+-+-+-+-+-+-+-+-+-+-+-+-+-+-+-+-+-+-+
|        Joined Source Address 1 (Encoded-Source format)        |
+-+-+-+-+-+-+-+-+-+-+-+-+-+-+-+-+-+-+-+-+-+-+-+-+-+-+-+-+-+-+-+-+
|                               .                               |
|                               .                               |
+-+-+-+-+-+-+-+-+-+-+-+-+-+-+-+-+-+-+-+-+-+-+-+-+-+-+-+-+-+-+-+-+
|        Joined Source Address n (Encoded-Source format)        |
+-+-+-+-+-+-+-+-+-+-+-+-+-+-+-+-+-+-+-+-+-+-+-+-+-+-+-+-+-+-+-+-+
|        Pruned Source Address 1 (Encoded-Source format)        |
+-+-+-+-+-+-+-+-+-+-+-+-+-+-+-+-+-+-+-+-+-+-+-+-+-+-+-+-+-+-+-+-+
|                               .                               |
|                               .                               |
+-+-+-+-+-+-+-+-+-+-+-+-+-+-+-+-+-+-+-+-+-+-+-+-+-+-+-+-+-+-+-+-+
|        Pruned Source Address n (Encoded-Source format)        |
+-+-+-+-+-+-+-+-+-+-+-+-+-+-+-+-+-+-+-+-+-+-+-+-+-+-+-+-+-+-+-+-+
```

PIM Version, Type, Reserved, Checksum

Described in Section 4.9.

Unicast Upstream Neighbor Address

The address of the upstream neighbor that is the target of the message. The format for this address is given in the Encoded-Unicast address in Section 4.9.1. For IPv6 the source address used for multicast messages is the link-local address of the interface on which the message is being sent. For IPv4, the source address is the primary address associated with that interface.

Reserved

Transmitted as zero, ignored on receipt.

Holdtime

The amount of time a receiver must keep the Join/Prune state alive, in seconds. If the Holdtime is set to '0xffff', the receiver of this message should hold the state until canceled by the appropriate canceling Join/Prune message, or timed out according to local policy. This may be used with dial-on-demand links, to avoid keeping the link up with periodic Join/Prune messages.

Note that the HoldTime must be larger than the J/P_Override_Interval(I).

Number of Groups

The number of multicast group sets contained in the message.

Multicast group address

For format description, see Section 4.9.1.

Number of Joined Sources

Number of joined source addresses listed for a given group.

Joined Source Address 1 .. n

This list contains the sources for a given group that the sending router will forward multicast datagrams from if received on the interface on which the Join/Prune message is sent.

See Encoded-Source-Address format in Section 4.9.1.

Number of Pruned Sources

Number of pruned source addresses listed for a group.

Pruned Source Address 1 .. n

This list contains the sources for a given group that the sending router does not want to forward multicast datagrams from when received on the interface on which the Join/Prune message is sent.

Within one PIM Join/Prune message, all the Multicast Group Addresses, Joined Source addresses, and Pruned Source addresses MUST be of the same address family. It is NOT PERMITTED to mix IPv4 and IPv6 addresses within the same message. In addition, the address family of the fields in the message SHOULD be the same as the IP source and destination addresses of the packet. This permits maximum implementation flexibility for dual-stack IPv4/IPv6 routers. If a router receives a message with mixed family addresses, it SHOULD only process the addresses that are of the same family as the unicast upstream neighbor address.

4.9.5.1. Group Set Source List Rules

As described above, Join/Prune messages are composed of one or more group sets. Each set contains two source lists, the Joined Sources and the Pruned Sources. This section describes the different types of group sets and source list entries that can exist in a Join/Prune message.

There are two valid group set types:

Wildcard Group Set

The wildcard group set is represented by the entire multicast range: the beginning of the multicast address range in the group address field and the prefix length of the multicast address range in the mask length field of the Multicast Group Address (i.e., '224.0.0.0/4' for IPv4 or 'ff00::/8' for IPv6). Each Join/Prune message SHOULD contain at most one wildcard group set. Each wildcard group set may contain one or more (*,*,RP) source list entries in either the Joined or Pruned lists.

A (*,*,RP) source list entry may only exist in a wildcard group set. When added to a Joined source list, this type of source entry expresses the router's interest in receiving traffic for all groups mapping to the specified RP. When added to a Pruned source list a (*,*,RP) entry expresses the router's interest to stop receiving such traffic. Note that as indicated by the Join/Prune state machines, such a Join or Prune will NOT override Join/Prune state created using a Group-Specific Set (see below).

(*,*,RP) source list entries have the Source-Address set to the address of the RP, the Source-Address Mask-Len set to the full length of the IP address, and both the WC and RPT bits of the Source-Address set to 1.

Group-Specific Set

A Group-Specific Set is represented by a valid IP multicast address in the group address field and the full length of the IP address in the mask length field of the Multicast Group Address. Each Join/Prune message SHOULD NOT contain more than one group-specific set for the same IP multicast address. Each group-specific set may contain (*,G), (S,G,rpt), and (S,G) source list entries in the Joined or Pruned lists.

(*,G)

The (*,G) source list entry is used in Join/Prune messages sent towards the RP for the specified group. It expresses interest (or lack thereof) in receiving traffic sent to the group through the Rendezvous-Point shared tree. There may only be one such entry in both the Joined and Pruned lists of a group-specific set.

(*,G) source list entries have the Source-Address set to the address of the RP for group G, the Source-Address Mask-Len set to the full length of the IP address, and both the WC and RPT bits of the Encoded-Source-Address set.

(S,G,rpt)

The (S,G,rpt) source list entry is used in Join/Prune messages sent towards the RP for the specified group. It expresses interest (or lack thereof) in receiving traffic through the shared tree sent by the specified source to this group. For each source address, the entry may exist in only one of the Joined and Pruned source lists of a group-specific set, but not both.

(S,G,rpt) source list entries have the Source-Address set to the address of the source S, the Source-Address Mask-Len set to the full length of the IP address, and the WC bit cleared and the RPT bit set in the Encoded-Source-Address.

(S,G)

The (S,G) source list entry is used in Join/Prune messages sent towards the specified source. It expresses interest (or lack thereof) in receiving traffic through the shortest path tree sent by the source to the specified group. For each source address, the entry may exist in only one of the Joined and Pruned source lists of a group-specific set, but not both.

(S,G) source list entries have the Source-Address set to the address of the source S, the Source-Address Mask-Len set to the full length of the IP address, and both the WC and RPT bits of the Encoded-Source-Address cleared.

The rules described above are sufficient to prevent invalid combinations of source list entries in group-specific sets. There are, however, a number of combinations that have a valid interpretation but that are not generated by the protocol as described in this specification:

- Combining a (*,G) Join and a (S,G,rpt) Join entry in the same message is redundant as the (*,G) entry covers the information provided by the (S,G,rpt) entry.
- The same applies for a (*,G) Prunes and (S,G,rpt) Prunes.
- The combination of a (*,G) Prune and a (S,G,rpt) Join is also not generated. (S,G,rpt) Joins are only sent when the router is receiving all traffic for a group on the shared tree and it wishes to indicate a change for the particular source. As a (*,G) prune indicates that the router no longer wishes to receive shared tree traffic, the (S,G,rpt) Join would be meaningless.
- As Join/Prune messages are targeted to a single PIM neighbor, including both a (S,G) Join and a (S,G,rpt) Prune in the same message is usually redundant. The (S,G) Join informs the neighbor that the sender wishes to receive the particular source on the shortest path tree. It is therefore unnecessary for the router to say that it no longer wishes to receive it on the shared tree. However, there is a valid interpretation for this combination of entries. A downstream router may have to instruct its upstream only to start forwarding a specific source once it has started receiving the source on the shortest-path tree.
- The combination of a (S,G) Prune and a (S,G,rpt) Join could possibly be used by a router to switch from receiving a particular source on the shortest-path tree back to receiving it on the shared tree (provided that the RPF neighbor for the shortest-path and shared trees is common). However, Sparse-Mode PIM does not provide a mechanism for explicitly switching back to the shared tree.

The rules are summarized in the tables below.

	Join (*,G)	**Prune (*,G)**	**Join (S,G,rpt)**	**Prune (S,G,rpt)**	**Join (S,G)**	**Prune (S,G)**
Join (*,G)	-	no	?	yes	yes	yes
Prune (*,G)	no	-	?	?	yes	yes
Join (S,G,rpt)	?	?	-	no	yes	?
Prune (S,G,rpt)	yes	?	no	-	yes	?
Join (S,G)	yes	yes	yes	yes	-	no
Prune (S,G)	yes	yes	?	?	no	-

	Join (*,*,RP)	**Prune (*,*,RP)**	**all others**
Join (*,*,RP)	-	no	yes
Prune (*,*,RP)	no	-	yes
all others	yes	yes	see above

yes Allowed and expected.

no Combination is not allowed by the protocol and MUST NOT be generated by a router. A router MAY accept these messages, but the result is undefined. An error message MAY be logged to the administrator in a rate-limited manner.

? Combination not expected by the protocol, but well-defined. A router MAY accept it but SHOULD NOT generate it.

The order of source list entries in a group set source list is not important, except where limited by the packet format itself.

4.9.5.2. Group Set Fragmentation

When building a Join/Prune for a particular neighbor, a router should try to include in the message as much of the information it needs to convey to the neighbor as possible. This implies adding one group set for each multicast group that has information pending transmission and within each set including all relevant source list entries.

On a router with a large amount of multicast state, the number of entries that must be included may result in packets that are larger than the maximum IP packet size. In most such cases, the information may be split into multiple messages.

There is an exception with group sets that contain a (*,G) Joined source list entry. The group set expresses the router's interest in receiving all traffic for the specified group on the shared tree, and it MUST include an (S,G,rpt) Pruned source list entry for every source that the router does not wish to receive. This list of (S,G,rpt) Pruned source-list entries MUST not be split in multiple messages.

If only N (S,G,rpt) Prune entries fit into a maximum-sized Join/Prune message, but the router has more than N (S,G,rpt) Prunes to add, then the router MUST choose to include the first N (numerically smallest in network byte order) IP addresses.

4.9.6. Assert Message Format

The Assert message is used to resolve forwarder conflicts between routers on a link. It is sent when a router receives a multicast data packet on an interface on which the router would normally have forwarded that packet. Assert messages may also be sent in response to an Assert message from another router.

```
 0                   1                   2                   3
 0 1 2 3 4 5 6 7 8 9 0 1 2 3 4 5 6 7 8 9 0 1 2 3 4 5 6 7 8 9 0 1
+-+-+-+-+-+-+-+-+-+-+-+-+-+-+-+-+-+-+-+-+-+-+-+-+-+-+-+-+-+-+-+-+
|PIM Ver| Type  |   Reserved    |           Checksum            |
+-+-+-+-+-+-+-+-+-+-+-+-+-+-+-+-+-+-+-+-+-+-+-+-+-+-+-+-+-+-+-+-+
|              Group Address (Encoded-Group format)             |
+-+-+-+-+-+-+-+-+-+-+-+-+-+-+-+-+-+-+-+-+-+-+-+-+-+-+-+-+-+-+-+-+
|            Source Address (Encoded-Unicast format)            |
+-+-+-+-+-+-+-+-+-+-+-+-+-+-+-+-+-+-+-+-+-+-+-+-+-+-+-+-+-+-+-+-+
|R|                      Metric Preference                      |
+-+-+-+-+-+-+-+-+-+-+-+-+-+-+-+-+-+-+-+-+-+-+-+-+-+-+-+-+-+-+-+-+
|                             Metric                            |
+-+-+-+-+-+-+-+-+-+-+-+-+-+-+-+-+-+-+-+-+-+-+-+-+-+-+-+-+-+-+-+-+
```

PIM Version, Type, Reserved, Checksum
Described in Section 4.9.

Group Address
The group address for which the router wishes to resolve the forwarding conflict. This is an Encoded-Group address, as specified in Section 4.9.1.

Source Address
Source address for which the router wishes to resolve the forwarding conflict. The source address MAY be set to zero for (*,G) asserts (see below). The format for this address is given in Encoded-Unicast-Address in Section 4.9.1.

R RPT-bit is a 1-bit value. The RPT-bit is set to 1 for Assert(*,G) messages and 0 for Assert(S,G) messages.

Metric Preference
Preference value assigned to the unicast routing protocol that provided the route to the multicast source or Rendezvous-Point.

Metric
The unicast routing table metric associated with the route used to reach the multicast source or Rendezvous-Point. The metric is in units applicable to the unicast routing protocol used.

Assert messages can be sent to resolve a forwarding conflict for all traffic to a given group or for a specific source and group.

Assert(S,G)
Source-specific asserts are sent by routers forwarding a specific source on the shortest-path tree (SPTbit is TRUE). (S,G) Asserts have the Group-Address field set to the group G and the Source-Address field set to the source S. The RPT-bit is set to 0, the Metric-Preference is set to MRIB.pref(S) and the Metric is set to MRIB.metric(S).

Assert(*,G)

Group-specific asserts are sent by routers forwarding data for the group and source(s) under contention on the shared tree. (*,G) asserts have the Group-Address field set to the group G. For data-triggered Asserts, the Source-Address field MAY be set to the IP source address of the data packet that triggered the Assert and is set to zero otherwise. The RPT-bit is set to 1, the Metric-Preference is set to MRIB.pref(RP(G)), and the Metric is set to MRIB.metric(RP(G)).

4.10. PIM Timers

PIM-SM maintains the following timers, as discussed in Section 4.1. All timers are countdown timers; they are set to a value and count down to zero, at which point they typically trigger an action. Of course they can just as easily be implemented as count-up timers, where the absolute expiry time is stored and compared against a real-time clock, but the language in this specification assumes that they count downwards to zero.

Global Timers

Per interface (I):

Hello Timer: HT(I)

Per neighbor (N):

Neighbor Liveness Timer: NLT(N,I)

Per active RP (RP):

(*,*,RP) Join Expiry Timer: ET(*,*,RP,I)

(*,*,RP) Prune-Pending Timer: PPT(*,*,RP,I)

Per Group (G):

(*,G) Join Expiry Timer: ET(*,G,I)

(*,G) Prune-Pending Timer: PPT(*,G,I)

(*,G) Assert Timer: AT(*,G,I)

Per Source (S):

(S,G) Join Expiry Timer: ET(S,G,I)

(S,G) Prune-Pending Timer: PPT(S,G,I)

(S,G) Assert Timer: AT(S,G,I)

(S,G,rpt) Prune Expiry Timer: ET(S,G,rpt,I)

(S,G,rpt) Prune-Pending Timer: PPT(S,G,rpt,I)

Per active RP (RP):

(*,*,RP) Upstream Join Timer: JT(*,*,RP)

Per Group (G):

(*,G) Upstream Join Timer: JT(*,G)

Per Source (S):

(S,G) Upstream Join Timer: JT(S,G)

(S,G) Keepalive Timer: KAT(S,G)

(S,G,rpt) Upstream Override Timer: OT(S,G,rpt)

At the DRs or relevant Assert Winners only:

Per Source,Group pair (S,G):

Register-Stop Timer: RST(S,G)

4.11. Timer Values

When timers are started or restarted, they are set to default values. This section summarizes those default values.

Note that protocol events or configuration may change the default value of a timer on a specific interface. When timers are initialized in this document, the value specific to the interface in context must be used.

Some of the timers listed below (Prune-Pending, Upstream Join, Upstream Override) can be set to values that depend on the settings of the Propagation_Delay and Override_Interval of the corresponding interface. The default values for these are given below.

Variable Name: Propagation_Delay(I)

Value Name	Value	Explanation
Propagation_delay_default	0.5 secs	Expected propagation delay over the local link.

The default value of the Propagation_delay_default is chosen to be relatively large to provide compatibility with older PIM implementations.

Variable Name: Override_Interval(I)

Value Name	Value	Explanation
t_override_default	2.5 secs	Default delay interval over which to randomize when scheduling a delayed Join message.

Timer Name: Hello Timer (HT(I))

Value Name	Value	Explanation
Hello_Period	30 secs	Periodic interval for Hello messages.
Triggered_Hello_Delay	5 secs	Randomized interval for initial Hello message on bootup or triggered Hello message to a rebooting neighbor.

At system power-up, the timer is initialized to rand(0, Triggered_Hello_Delay) to prevent synchronization. When a new or rebooting neighbor is detected, a responding Hello is sent within rand(0, Triggered_Hello_Delay).

Timer Name: Neighbor Liveness Timer (NLT(N,I))

Value Name	Value	Explanation
Default_Hello_Holdtime	3.5 * Hello_Period	Default holdtime to keep neighbor state alive
Hello_Holdtime	from message	Holdtime from Hello Message Holdtime option.

The Holdtime in a Hello Message should be set to (3.5 * Hello_Period), giving a default value of 105 seconds.

Timer Names: Expiry Timer (ET(*,*,RP,I), ET(*,G,I), ET(S,G,I), ET(S,G,rpt,I))

Value Name	Value	Explanation
J/P_HoldTime	from message	Holdtime from Join/Prune Message

See details of JT(*,G) for the Holdtime that is included in Join/Prune Messages.

Timer Names: Prune-Pending Timer (PPT(*,*,RP,I), PPT(*,G,I), PPT(S,G,I), PPT(S,G,rpt,I))

Value Name	Value	Explanation
J/P_Override_Interval(I)	Default: Effective_ Propagation_Delay(I) + EffectiveOverride_ Interval(I)	Short period after a join or prune to allow other routers on the LAN to override the join or prune

Note that both the Effective_Propagation_Delay(I) and the Effective_Override_Interval(I) are interface-specific values that may change when Hello messages are received (see Section 4.3.3).

Timer Names: Assert Timer (AT(*,G,I), AT(S,G,I))

Value Name	Value	Explanation
Assert_Override_Interval	Default: 3 secs	Short interval before an assert times out where the assert winner resends an Assert message
Assert_Time	Default: 180 secs	Period after last assert before assert state is timed out

Note that for historical reasons, the Assert message lacks a Holdtime field. Thus, changing the Assert Time from the default value is not recommended.

Timer Names: Upstream Join Timer (JT(*,*,RP), JT(*,G), JT(S,G))

Value Name	Value	Explanation
t_periodic	Default: 60 secs	Period between Join/Prune Messages
t_suppressed	rand(1.1 * t_periodic, 1.4 * t_periodic) when Suppression_Enabled(I) is true, 0 otherwise	Suppression period when someone else sends a J/P message so we don't need to do so.
t_override	rand(0, Effective_ Override_Interval(I))	Randomized delay to prevent response implosion when sending a join message to override someone else's Prune message.

t_periodic may be set to take into account such things as the configured bandwidth and expected average number of multicast route entries for the attached network or link (e.g., the period would be longer for lower-speed links, or for routers in the center of the network that expect to have a larger number of entries). If the Join/Prune-Period is modified during operation, these changes should be made relatively infrequently, and the router should continue to refresh at its previous Join/Prune-Period for at least Join/Prune-Holdtime, in order to allow the upstream router to adapt.

The holdtime specified in a Join/Prune message should be set to (3.5 * t_periodic).

t_override depends on the Effective_Override_Interval of the upstream interface, which may change when Hello messages are received.

t_suppressed depends on the Suppression State of the upstream interface (Section 4.3.3) and becomes zero when suppression is disabled.

Timer Name: Upstream Override Timer (OT(S,G,rpt))

Value Name	Value	Explanation
t_override	see Upstream Join Timer	see Upstream Join Timer

The upstream Override Timer is only ever set to t_override; this value is defined in the section on Upstream Join Timers.

Timer Name: Keepalive Timer (KAT(S,G))

Value Name	Value	Explanation
Keepalive_Period	Default: 210 secs	Period after last (S,G) data packet during which (S,G) Join state will be maintained even in the absence of (S,G) Join messages.
RP_Keepalive_Period	(3 * Register_ Suppression_Time) + Register_Probe_Time	As Keepalive_Period, but at the RP when a Register-Stop is sent.

The normal keepalive period for the KAT(S,G) defaults to 210 seconds. However, at the RP, the keepalive period must be at least the Register_Suppression_Time, or the RP may time out the (S,G) state before the next Null-Register arrives. Thus, the KAT(S,G) is set to

max(Keepalive_Period, RP_Keepalive_Period) when a Register-Stop is sent.

Timer Name: Register-Stop Timer (RST(S,G))

Value Name	Value	Explanation
Register_Suppression_Time	Default: 60 secs	Period during which a DR stops sending Register-encapsulated data to the RP after receiving a Register-Stop message.
Register_Probe_Time	Default: 5 secs	Time before RST expires when a DR may send a Null-Register to the RP to cause it to resend a Register-Stop message.

If the Register_Suppression_Time or the Register_Probe_Time are configured to values other than the defaults, it MUST be ensured that the value of the Register_Probe_Time is less than half the value of the Register_Suppression_Time to prevent a possible negative value in the setting of the Register-Stop Timer.

5. IANA Considerations

5.1. PIM Address Family

The PIM Address Family field was chosen to be 8 bits as a tradeoff between packet format and use of the IANA assigned numbers. Because when the PIM packet format was designed only 15 values were assigned for Address Families, and large numbers of new Address Family values were not envisioned, 8 bits seemed large enough. However, the IANA assigns Address Families in a 16-bit field. Therefore, the PIM Address Family is allocated as follows:

Values 0 through 127 are designated to have the same meaning as IANA-assigned Address Family Numbers [7].

Values 128 through 250 are designated to be assigned for PIM by the IANA based upon IESG Approval, as defined in [9].

Values 251 through 255 are designated for Private Use, as defined in [9].

5.2. PIM Hello Options

Values 17 through 65000 are to be assigned by the IANA. Since the space is large, they may be assigned as First Come First Served as defined in [9]. Such assignments are valid for one year and may be renewed. Permanent assignments require a specification (see "Specification Required" in [9].)

6. Security Considerations

This section describes various possible security concerns related to the PIM-SM protocol, including a description of how to use IPsec to secure the protocol. The reader is referred to [15] and [16] for further discussion of PIM-SM and multicast security. The IPsec authentication header [8] MAY be used to provide data integrity protection and groupwise

data origin authentication of PIM protocol messages. Authentication of PIM messages can protect against unwanted behaviors caused by unauthorized or altered PIM messages.

6.1. Attacks Based on Forged Messages

The extent of possible damage depends on the type of counterfeit messages accepted. We next consider the impact of possible forgeries, including forged link-local (Join/Prune, Hello, and Assert) and forged unicast (Register and Register-Stop) messages.

6.1.1. Forged Link-Local Messages

Join/Prune, Hello, and Assert messages are all sent to the link-local ALL_PIM_ROUTERS multicast addresses and thus are not forwarded by a compliant router. A forged message of this type can only reach a LAN if it was sent by a local host or if it was allowed onto the LAN by a compromised or non-compliant router.

1. A forged Join/Prune message can cause multicast traffic to be delivered to links where there are no legitimate requesters, potentially wasting bandwidth on that link. A forged leave message on a multi-access LAN is generally not a significant attack in PIM, because any legitimately joined router on the LAN would override the leave with a join before the upstream router stops forwarding data to the LAN.
2. By forging a Hello message, an unauthorized router can cause itself to be elected as the designated router on a LAN. The designated router on a LAN is (in the absence of asserts) responsible for forwarding traffic to that LAN on behalf of any local members. The designated router is also responsible for register-encapsulating to the RP any packets that are originated by hosts on the LAN. Thus, the ability of local hosts to send and receive multicast traffic may be compromised by a forged Hello message.
3. By forging an Assert message on a multi-access LAN, an attacker could cause the legitimate designated forwarder to stop forwarding traffic to the LAN. Such a forgery would prevent any hosts downstream of that LAN from receiving traffic.

6.1.2. Forged Unicast Messages

Register messages and Register-Stop messages are forwarded by intermediate routers to their destination using normal IP forwarding. Without data origin authentication, an attacker who is located anywhere in the network may be able to forge a Register or Register-Stop message. We consider the effect of a forgery of each of these messages next.

1. By forging a Register message, an attacker can cause the RP to inject forged traffic onto the shared multicast tree.
2. By forging a Register-stop message, an attacker can prevent a legitimate DR from Registering packets to the RP. This can prevent local hosts on that LAN from sending multicast packets.

The above two PIM messages are not changed by intermediate routers and need only be examined by the intended receiver. Thus, these messages can be authenticated end-to-end, using AH. Attacks on Register and Register-Stop messages do not apply to a PIM-SSM-only implementation, as these messages are not required for PIM-SSM.

6.2. Non-Cryptographic Authentication Mechanisms

A PIM router SHOULD provide an option to limit the set of neighbors from which it will accept Join/Prune, Assert, and Hello messages. Either static configuration of IP addresses or an IPsec security association may be used. Furthermore, a PIM router SHOULD NOT accept protocol messages from a router from which it has not yet received a valid Hello message.

A Designated Router MUST NOT register-encapsulate a packet and send it to the RP unless the source address of the packet is a legal address for the subnet on which the packet was received. Similarly, a Designated Router SHOULD NOT accept a Register-Stop packet whose IP source address is not a valid RP address for the local domain.

An implementation SHOULD provide a mechanism to allow an RP to restrict the range of source addresses from which it accepts Register-encapsulated packets.

All options that restrict the range of addresses from which packets are accepted MUST default to allowing all packets.

6.3. Authentication Using IPsec

The IPsec [8] transport mode using the Authentication Header (AH) is the recommended method to prevent the above attacks against PIM. The specific AH authentication algorithm and parameters, including the choice of authentication algorithm and the choice of key, are configured by the network administrator. When IPsec authentication is used, a PIM router should reject (drop without processing) any unauthorized PIM protocol messages.

To use IPsec, the administrator of a PIM network configures each PIM router with one or more security associations (SAs) and associated Security Parameter Indexes (SPIs) that are used by senders to authenticate PIM protocol messages and are used by receivers to authenticate received PIM protocol messages. This document does not describe protocols for establishing SAs. It assumes that manual configuration of SAs is performed, but it does not preclude the use of a negotiation protocol such as the Internet Key Exchange [14] to establish SAs.

IPsec [8] provides protection against replayed unicast and multicast messages. The anti-replay option for IPsec SHOULD be enabled on all SAs.

The following sections describe the SAs required to protect PIM protocol messages.

6.3.1. Protecting Link-Local Multicast Messages

The network administrator defines an SA and SPI that are to be used to authenticate all link-local PIM protocol messages (Hello, Join/Prune, and Assert) on each link in a PIM domain.

IPsec [8] allows (but does not require) different Security Policy Databases (SPD) for each router interface. If available, it may be desirable to configure the Security Policy Database at a PIM router such that all incoming and outgoing Join/Prune, Assert, and Hello packets use a different SA for each incoming or outgoing interface.

6.3.2. Protecting Unicast Messages

IPsec can also be used to provide data origin authentication and data integrity protection for the Register and Register-Stop unicast messages.

6.3.2.1. Register Messages

The Security Policy Database at every PIM router is configured to select an SA to use when sending PIM Register packets to each rendezvous point.

In the most general mode of operation, the Security Policy Database at each DR is configured to select a unique SA and SPI for traffic sent to each RP. This allows each DR to have a different authentication algorithm and key to talk to the RP. However, this creates a daunting key management and distribution problem for the network administrator. Therefore, it may be preferable in PIM domains where all Designated Routers are under a single administrative control that the same authentication algorithm parameters (including

the key) be used for all Registered packets in a domain, regardless of who are the RP and the DR.

In this "single shared key" mode of operation, the network administrator must choose an SPI for each DR that will be used to send it PIM protocol packets. The Security Policy Database at every DR is configured to select an SA (including the authentication algorithm, authentication parameters, and this SPI) when sending Register messages to this RP.

By using a single authentication algorithm and associated parameters, the key distribution problem is simplified. Note, however, that this method has the property that, in order to change the authentication method or authentication key used, all routers in the domain must be updated.

6.3.2.2. Register-Stop Messages

Similarly, the Security Policy Database at each Rendezvous Point should be configured to choose an SA to use when sending Register-Stop messages. Because Register-Stop messages are unicast to the destination DR, a different SA and a potentially unique SPI are required for each DR.

In order to simplify the management problem, it may be acceptable to use the same authentication algorithm and authentication parameters, regardless of the sending RP and regardless of the destination DR. Although a unique SA is needed for each DR, the same authentication algorithm and authentication algorithm parameters (secret key) can be shared by all DRs and by all RPs.

6.4. Denial-of-Service Attacks

There are a number of possible denial-of-service attacks against PIM that can be caused by generating false PIM protocol messages or even by generating data false traffic. Authenticating PIM protocol traffic prevents some, but not all, of these attacks. Three of the possible attacks include:

- Sending packets to many different group addresses quickly can be a denial-of-service attack in and of itself. This will cause many register-encapsulated packets, loading the DR, the RP, and the routers between the DR and the RP.
- Forging Join messages can cause a multicast tree to get set up. A large number of forged joins can consume router resources and result in denial of service.
- Forging a (*,*,RP) join presents a possibility for a denial-of-service attack by causing all traffic in the domain to flow to the PMBR issuing the join. (*,*,RP) behavior is included here primarily for backwards compatibility with prior revisions of the spec. However, the implementation of (*,*,RP) and PMBR is optional. When using (*,*,RP), the security concerns should be carefully considered.

7. Acknowledgements

PIM-SM was designed over many years by a large group of people, including ideas, comments, and corrections from Deborah Estrin, Dino Farinacci, Ahmed Helmy, David Thaler, Steve Deering, Van Jacobson, C. Liu, Puneet Sharma, Liming Wei, Tom Pusateri, Tony Ballardie, Scott Brim, Jon Crowcroft, Paul Francis, Joel Halpern, Horst Hodel, Polly Huang, Stephen Ostrowski, Lixia Zhang, Girish Chandranmenon, Brian Haberman, Hal Sandick, Mike Mroz, Garry Kump, Pavlin Radoslavov, Mike Davison, James Huang, Christopher Thomas Brown, and James Lingard.

Thanks are due to the American Licorice Company, for its obscure but possibly essential role in the creation of this document.

8. Normative References

[1] Bradner, S., “Key words for use in RFCs to Indicate Requirement Levels”, BCP 14, RFC 2119, March 1997.

[2] Cain, B., Deering, S., Kouvelas, I., Fenner, B., and A. Thyagarajan, “Internet Group Management Protocol, Version 3”, RFC 3376, October 2002.

[3] Deering, S., “Host extensions for IP multicasting”, STD 5, RFC 1112, August 1989.

[4] Deering, S., Fenner, W., and B. Haberman, “Multicast Listener Discovery (MLD) for IPv6”, RFC 2710, October 1999.

[5] Deering, S. and R. Hinden, “Internet Protocol, Version 6 (IPv6) Specification”, RFC 2460, December 1998.

[6] Holbrook, H. and B. Cain, “Source-Specific Multicast for IP”, RFC 4507, August 2006.

[7] IANA, “Address Family Numbers”, <http://www.iana.org/assignments/address-family-numbers>

[8] Kent, S. and K. Seo, “Security Architecture for the Internet Protocol”, RFC 4301, December 2005.

[9] Narten, T. and H. Alvestrand, “Guidelines for Writing an IANA Considerations Section in RFCs”, BCP 26, RFC 2434, October 1998.

9. Informative References

[10] Bates, T., Rekhter, Y., Chandra, R., and D. Katz, “Multiprotocol Extensions for BGP-4”, RFC 2858, June 2000.

[11] Bhaskar, N., Gall, A., Lingard, J., and S. Venaas, “Bootstrap Router (BSR) Mechanism for PIM Sparse Mode”, Work in Progress, May 2006.

[12] Black, D., “Differentiated Services and Tunnels”, RFC 2983, October 2000.

[13] Handley, M., Kouvelas, I., Speakman, T., and L. Vicisano, “Bi-directional Protocol Independent Multicast”, Work in Progress, October 2005.

[14] Kaufman, C., “Internet Key Exchange (IKEv2) Protocol”, RFC 4306, December 2005.

[15] Savola, P., Lehtonen, R., and D. Meyer, “Protocol Independent Multicast - Sparse Mode (PIM-SM) Multicast Routing Security Issues and Enhancements”, RFC 4609, August 2006.

[16] Savola, P. and J. Lingard, “Last-hop Threats to Protocol Independent Multicast (PIM)”, Work in Progress, January 2005.

[17] Savola, P. and B. Haberman, “Embedding the Rendezvous Point (RP) Address in an IPv6 Multicast Address”, RFC 3956, November 2004.

[18] Thaler, D., “Interoperability Rules for Multicast Routing Protocols”, RFC 2715, October 1999.

10. Appendix A: PIM Multicast Border Router Behavior

In some cases, PIM-SM domains will interconnect with non-PIM multicast domains. In these cases, the border routers of the PIM domain speak PIM-SM on some interfaces and speak other multicast routing protocols on other interfaces. Such routers are termed PIM Multicast Border Routers (PMBRs). In general, RFC 2715 [18] provides rules for interoperability between different multicast routing protocols. In this appendix, we specify how PMBRs differ from regular PIM-SM routers.

From the point of view of PIM-SM, a PMBR has two tasks:

- To ensure that traffic from sources outside the PIM-SM domain reaches receivers inside the domain.
- To ensure that traffic from sources inside the PIM-SM domain reaches receivers outside the domain.

We note that multiple PIM-SM domains are sometimes connected together using protocols such as Multicast Source Discovery Protocol (MSDP), which provides information about active external sources, but does not follow RFC 2715. In such cases, the domains are not connected via PMBRs because Join(S,G) messages traverse the border between domains. A PMBR is required when no PIM messages can traverse the border.

10.1. Sources External to the PIM-SM Domain

A PMBR needs to ensure that traffic from multicast sources external to the PIM-SM domain reaches receivers inside the domain. The PMBR will follow the rules in RFC 2715, such that traffic from external sources reaches the PMBR itself.

According to RFC 2715, the PIM-SM component of the PMBR will receive an (S,G) Creation event when data from an (S,G) data packet from an external source first reaches the PMBR. If RPF_interface(S) is an interface in the PIM-SM domain, the packet cannot be originated into the PIM domain at this router, and the PIM-SM component of the PMBR will not process the packet. Otherwise, the PMBR will then act exactly as if it were the DR for this source (see Section 4.4.1), with the following modifications:

- The Border-bit is set in all PIM Register messages sent for these sources.
- DirectlyConnected(S) is treated as being TRUE for these sources.
- The PIM-SM forwarding rule "iif == RPF_interface(S)" is relaxed to be TRUE if iif is any interface that is not part of the PIM-SM component of the PMBR (see Section 4.2).

10.2. Sources Internal to the PIM-SM Domain

A PMBR needs to ensure that traffic from sources inside the PIM-SM domain reaches receivers outside the domain. Using terminology from RFC 2715, there are two possible scenarios for this:

- Another component of the PMBR is a wildcard receiver. In this case, the PIM-SM component of the PMBR must ensure that traffic from all internal sources reaches the PMBR until it is informed otherwise.

  Note that certain profiles of PIM-SM (e.g., PIM-SSM, PIM-SM with Embedded RP) cannot interoperate with a neighboring wildcard receiver domain.
- No other component of the PMBR is a wildcard receiver. In this case the PMBR will receive explicit information as to which groups or (source,group) pairs the external domains wish to receive.

In the former case, the PMBR will need to send a Join(*,*,RP) to all the active RPs in the PIM-SM domain. It may also send a Join(*,*,RP) to all the candidate RPs in the PIM-SM domain. This will cause all traffic in the domain to reach the PMBR. The PMBR may then act as if it were a DR with directly connected receivers and trigger the transition to a shortest path tree (see Section 4.2.1).

In the latter case, the PMBR will not need to send Join(*,*,RP) messages. However, the PMBR will still need to act as a DR with directly connected receivers on behalf of the external receivers in terms of being able to switch to the shortest-path tree for internally-reached sources.

According to RFC 2715, the PIM-SM component of the PMBR may receive a number of alerts generated by events in the external routing components. To implement the above behavior, one reasonable way to map these alerts into PIM-SM state is as follows:

- When a PIM-SM component receives an (S,G) Prune alert, it sets local_receiver_include(S,G,I) to FALSE for the discard interface.
- When a PIM-SM component receives a (*,G) Prune alert, it sets local_receiver_include(*,G,I) to FALSE for the discard interface.
- When a PIM-SM component receives an (S,G) Join alert, it sets local_receiver_include(S,G,I) to TRUE for the discard interface.
- When a PIM-SM component receives a (*,G) Join alert, it sets local_receiver_include(*,G,I) to TRUE for the discard interface.
- When a PIM-SM component receives a (*,*) Join alert, it sets DownstreamJPState(*,*,RP,I) to Join state on the discard interface for all RPs in the PIM-SM domain.
- When a PIM-SM component receives a (*,*) Prune alert, it sets DownstreamJPState(*,*,RP,I) to NoInfo state on the discard interface for all RPs in the PIM-SM domain.

We refer above to the discard interface because the macros and state machines are interface specific, but we need to have PIM state that is not associated with any actual PIM-SM interface. Implementers are free to implement this in any reasonable manner.

Note that these state changes will then cause additional PIM-SM state machine transitions in the normal way.

These rules are, however, not sufficient to allow pruning off the (*,*,RP) tree. Some additional rules provide guidance as to one way this may be done:

- If the PMBR has joined on the (*,*,RP) tree, then it should set DownstreamJPState(*,G,I) to JOIN on the discard interface for all active groups.
- If the router receives a (S,G) prune alert, it will need to set DownstreamJPState(S,G,rpt,I) to PRUNE on the discard interface.
- If the router receives a (*,G) prune alert, it will need to set DownstreamJPState(S,G,rpt,I) to PRUNE on the discard interface for all active sources sending to G.

The rationale for this is that there is no way in PIM-SM to prune traffic off the (*,*,RP) tree, except by Joining the (*,G) tree and then pruning each source individually.

11. Index

Address_List **22**
Assert(*,G) 19,**97**
Assert(S,G) 19,**96**
AssertCancel(*,G) 74,**75**
AssertCancel(S,G) 61,69,**75**
AssertTimer(*,G,I) 11,17,69,**99**
AssertTimer(S,G,I) 12,17,63,**99**
AssertTrackingDesired(*,G,I) **71**,72,73
AssertTrackingDesired(S,G,I) 65,**66**,67,68
AssertWinner(*,G,I) **11**,15,17,71,74,**76**
AssertWinner(S,G,I) **12**,15,17,66,69,76,**76**
AssertWinnerMetric(*,G,I) **11**,74,**77**
AssertWinnerMetric(S,G,I) **12**,69,**76**
assert_metric **74**
Assert_Override_Interval 69,74,**99**
Assert_Time 69,74,**99**
AT(*,G,I) 11,17,69,97,**99**
AT(S,G,I) 12,17,63,97,**99**
CheckSwitchToSpt(S,G) 19,**20**
CouldAssert(*,G,I) 71,**71**,72,73,75
CouldAssert(S,G,I) 65,**66**,67,67,68,75
CouldRegister(S,G) 29,**30**
Default_Hello_Holdtime 23
DirectlyConnected(S). 19,**19**,20,30,106
DownstreamJPState(*,*,RP,I) **16**,107
DownstreamJPState(*,G,I) **16**
DownstreamJPState(S,G,I) **16**,29
DownstreamJPState(S,G,rpt,I) **16**
DR(I) **23**
dr_is_better(a,b,I) 23,**24**
DR_Priority **22**,23,24
Effective_Override_Interval(I) **26**,86,99
Effective_Propagation_Delay(I). **25**,99
ET(*,*,RP,I) 10,34,97,**99**
ET(*,G,I) 11,37,97,**99**
ET(S,G,I) 12,40,97,**99**
ET(S,G,rpt,I) 14,43,45,97,**99**
GenID 11,12,13,**22**,48,51,53,55,65,71
Hash_Function 9,**80**
Hello_Holdtime 23,**99**
Hello_Period 22,**98**
HT(I) **22**,98
IGMP 5,6,11,15,77,79
immediate_olist(*,*,RP) **15**,48
immediate_olist(*,G) **15**,52
immediate_olist(S,G) **15**,29,55
infinite_assert_metric() **75**
inherited_olist(S,G) **15**,19,29,32,55,66,82
inherited_olist(S,G,rpt) **15**,19,20,58,60,61
I_Am_Assert_Loser(*,G,I) 17
I_Am_Assert_Loser(S,G,I) 17
I_am_DR(I) 15,**24**,30,66,71
I_am_RP(G) 32,**32**

J/P_Holdtime 35,38,41,45,49,52,56,92,**99**,100
J/P_Override_Interval(I) 36,39,41,45,92,**99**
JoinDesired(*,*,RP) **48**,60
JoinDesired(*,G) 11,**52**,60,66,74
JoinDesired(S,G) 13,20,**55**,66,67,69
joins(*,*,RP(G)) 15
joins(*,*,RP) 15,**16**,66,71
joins(*,G) 15,**16**,66,71
joins(S,G) 15,**16**,66
JT(*,*,RP) 10,47,97,**100**
JT(*,G) 11,50,97,**100**
JT(S,G) 12,54,97,**100**
KAT(S,G) 12,18,19,20,30,32,55,81,97,**100**
KeepaliveTimer(S,G) 12,18,19,19,20,30,32,55,81,97,**100**
Keepalive_Period 19,**100**
lan_delay_enabled(I) **25**,26
LAN_Prune_Delay **22**
local_receiver_exclude(S,G,I) **15**
local_receiver_include(*,G,I) **15**,71,107
local_receiver_include(S,G,I) **15**,66
local_receiver_include(S,G,I). 107
lost_assert(*,G) 15,**16**,66
lost_assert(*,G,I) 15,16,**76**
lost_assert(S,G) 15,**16**
lost_assert(S,G,I) 15,16,**76**
lost_assert(S,G,rpt) **16**
lost_assert(S,G,rpt,I) 16,**76**
MBGP 4,5
MFIB 5,9
MLD 5,6,11,15,77,79
MRIB **4**,5,8,11,13,17,47,50,50,57,75,78,96
MRIB.next_hop(host) 17,**17**,47,48
my_assert_metric(*,G,I) **72**
my_assert_metric(S,G,I) **65**,68,70,**75**
NBR(Interface,IP_address) **17**,26,47,49,50
NLT(N,I) 10,23,97,99
OT(S,G,rpt) 14,58,97,**100**
Override_Interval(I) 10,22,24,26,86,**98**,99
packet_arrives_on_rp_tunnel(pkt) **32**
pim_exclude(S,G). 15,**15**,20,66
pim_include(*,G) 11,15,**15**,20,66,71
pim_include(S,G) 13,15,**15**,20,66
PPT(*,*,RP,I) 10,34,97,**99**
PPT(*,G,I) 11,37,97,**99**
PPT(S,G,I) 12,40,97,**99**
PPT(S,G,rpt,I) 14,43,45,97,**99**
Propagation_Delay(I). 22,25,**98**,99
Propagation_delay_default 25,**98**
PruneDesired(S,G,rpt) **60**,61,67,69
prunes(S,G,rpt) 15,**16**,66
Register-Stop(*,G) **31**
Register-Stop(S,G) 32
Register-StopTimer(S,G). 28,29,98,**101**
Register_Probe_Time. 29,33,**101**

Register_Suppression_Time 29,33,**101**
RP(G) 4,15,17,29,32,37,52,58,66,71,75,77,97
RPF **4**
RPF'(*,G) **17**,20,50,51,53,58,60,74,77
RPF'(S,G) **17**,20,54,58,60,69,77
RPF'(S,G,rpt) **17**,58,60,77
RPF_interface 71
RPF_interface(host) 17,19,20,30,52,52,56,66,71,76,82,106
RPTJoinDesired(G) **60**,61,71
rpt_assert_metric(G,I) 74,74,**75**
RST(S,G) 28,29,98,**101**
SPTbit(S,G) **13**,19,20,32,39,56,58,60,66,66,68,69,76,81
spt_assert_metric(S,I) 69,**75**,76
SSM 8,80
Suppression_Enabled(I) **26**,100
SwitchToSptDesired(S,G) 20,**20**,32
TIB 5,9,18
Triggered_Hello_Delay 22,22,**98**
t_joinsuppress 48,49,51,52,56
t_override 48,51,55,59,100,**100**
t_override_default 26,98
t_periodic 48,51,55,100
t_suppressed 26,49,52,55,56,100
Update_SPTbit(S,G,iif) 19,**20**
UpstreamJPState(S,G) **19**,82

Authors' Addresses

Bill Fenner
AT&T Labs - Research
1 River Oaks Place
San Jose, CA 95134

EMail: fenner@research.att.com

Mark Handley
Department of Computer Science
University College London
Gower Street
London WC1E 6BT
United Kingdom

EMail: M.Handley@cs.ucl.ac.uk

Hugh Holbrook
Arastra, Inc.
P.O. Box 10905
Palo Alto, CA 94303

EMail: holbrook@arastra.com

Isidor Kouvelas
Cisco Systems
170 W. Tasman Drive
San Jose, CA 95134

EMail: kouvelas@cisco.com

Full Copyright Statement

Copyright (C) The Internet Society (2006).

This document is subject to the rights, licenses and restrictions contained in BCP 78, and except as set forth therein, the authors retain all their rights.

This document and the information contained herein are provided on an "AS IS" basis and THE CONTRIBUTOR, THE ORGANIZATION HE/SHE REPRESENTS OR IS SPONSORED BY (IF ANY), THE INTERNET SOCIETY AND THE INTERNET ENGINEERING TASK FORCE DISCLAIM ALL WARRANTIES, EXPRESS OR IMPLIED, INCLUDING BUT NOT LIMITED TO ANY WARRANTY THAT THE USE OF THE INFORMATION HEREIN WILL NOT INFRINGE ANY RIGHTS OR ANY IMPLIED WARRANTIES OF MERCHANTABILITY OR FITNESS FOR A PARTICULAR PURPOSE.

Intellectual Property

The IETF takes no position regarding the validity or scope of any Intellectual Property Rights or other rights that might be claimed to pertain to the implementation or use of the technology described in this document or the extent to which any license under such rights might or might not be available; nor does it represent that it has made any independent effort to identify any such rights. Information on the procedures with respect to rights in RFC documents can be found in BCP 78 and BCP 79.

Copies of IPR disclosures made to the IETF Secretariat and any assurances of licenses to be made available, or the result of an attempt made to obtain a general license or permission for the use of such proprietary rights by implementers or users of this specification can be obtained from the IETF on-line IPR repository at http://www.ietf.org/ipr.

The IETF invites any interested party to bring to its attention any copyrights, patents or patent applications, or other proprietary rights that may cover technology that may be required to implement this standard. Please address the information to the IETF at ietf-ipr@ietf.org.

Acknowledgement

Funding for the RFC Editor function is provided by the IETF Administrative Support Activity (IASA).