Network Working Group
Request for Comments: 5317
Category: Informational

S. Bryant, Ed.
Cisco Systems
L. Andersson, Ed.
Acreo AB

February 2009

Joint Working Team (JWT) Report on MPLS Architectural Considerations for a Transport Profile

Status of This Memo

This memo provides information for the Internet community. It does not specify an Internet standard of any kind. Distribution of this memo is unlimited.

Copyright Notice

Copyright (c) 2009 IETF Trust and the persons identified as the document authors. All rights reserved.

This document is subject to BCP 78 and the IETF Trust's Legal Provisions Relating to IETF Documents (http://trustee.ietf.org/license-info) in effect on the date of publication of this document. Please review these documents carefully, as they describe your rights and restrictions with respect to this document.

Abstract

This RFC archives the report of the IETF - ITU-T Joint Working Team (JWT) on the application of MPLS to transport networks. The JWT recommended of Option 1: The IETF and the ITU-T jointly agree to work together and bring transport requirements into the IETF and extend IETF MPLS forwarding, OAM (Operations, Administration, and Management), survivability, network management and control plane protocols to meet those requirements through the IETF Standards Process. This RFC is available in ASCII (which contains a summary of the slides) and in PDF (which contains the summary and a copy of the slides).

Table of Contents

1. Introduction 3
2. Executive Summary 4
3. Introduction and Background Material 6
4. High-Level Architecture 6
5. OAM and Forwarding 6
6. Control Plane 7
7. Survivability 7
8. Network Management 7
9. Summary 7
10. IANA Considerations 8
11. Security Considerations 8
12. The JWT Report 8
13. Informative References 67

1. Introduction

For a number of years, the ITU-T has been designing a connection-oriented packet switched technology to be used in Transport Networks. A Transport Network can be considered to be the network that provides wide area connectivity upon which other services, such as IP or the phone network, run. The ITU-T chose to adapt the IETF's MPLS to this task, and introduced a protocol suite known as T-MPLS.

Quite late in the ITU-T design and specification cycle, there were a number of liaison exchanges between the ITU-T and the IETF concerning this technology. These liaisons can be found on the IETF Liaison Statement web page [LIAISON]. In addition, the chairs of the MPLS, PWE3, BFD, and CCAMP working groups as well as the Routing and Internet Area Directors attended a number of ITU-T meetings. During this process, the IETF became increasingly concerned that the incompatibility of IETF MPLS and ITU-T T-MPLS would "represent a mutual danger to both the Internet and the Transport network". These concerns led the chairs of the IESG and IAB to take the step of sending a liaison to the ITU-T, stating that either T-MPLS should become fully compliant MPLS protocol, standardized under the IETF process (the so-called "Option 1"), or it should become a completely disjoint protocol with a new name and completely new set of code points (the so-called "Option 2") [Ethertypes].

Option 1 and Option 2 were discussed at an ITU-T meeting of Question 12 Study Group 15 in Stuttgart [Stuttgart], where it was proposed that a Joint (ITU-T - IETF) Team should be formed to evaluate the issues, and make a recommendation to ITU-T management on the best way forward.

Following discussion between the management of the IETF and the ITU-T, a Joint Working Team (JWT) was established; this was supported by an IETF Design Team and an Ad Hoc Group on T-MPLS in the ITU-T [ahtmpls]. The first meeting of the Ad Hoc group occurred during the ITU-T Geneva Plenary in February 2008. As a result of the work of the JWT and the resulting agreement on a way forward, the fears that a set of next-generation network transport specifications developed by ITU-T could cause interoperability problems were allayed.

The JWT submitted their report to the ITU-T and IETF management in the form of a set of Power Point slides [MPLS-TP-22]. (See the PDF of this RFC.) The ITU-T have accepted the JWT recommendations, as documented in [MPLS-TP]. This RFC archives the JWT report in a format that is accessible to the IETF.

This RFC is available in ASCII (which contains a summary of the slides) and in PDF (which contains the summary and a copy of the slides). In the case of a conflict between the summary and the slides, the slides take precedence. Since those slides were the basis of an important agreement between the IETF and the ITU-T, it should further be noted that in the event that the PDF version of the slides differs from those emailed to ITU-T and IETF management on 18 April 2008 by the co-chairs of the JWT, the emailed slides take precedence.

2. Executive Summary

Slides 4 to 10 provide an executive summary of the JWT Report. The following is a summary of those slides:

The JWT achieved consensus on the recommendation of Option 1: to jointly agree to work together and bring transport requirements into the IETF and extend IETF MPLS forwarding, OAM, survivability, network management, and control plane protocols to meet those requirements through the IETF Standards Process. The Joint Working Team believed that this would fulfill the mutual goals of improving the functionality of the transport networks and the Internet and guaranteeing complete interoperability and architectural soundness. This technology would be referred to as the Transport Profile for MPLS (MPLS-TP).

The JWT recommended that future work should focus on:

In the IETF:

Definition of the MPLS "Transport Profile" (MPLS-TP).

In the ITU-T:

Integration of MPLS-TP into the transport network,

Alignment of the current T-MPLS ITU-T Recommendations with MPLS-TP and,

Termination of the work on current T-MPLS.

The technical feasibility analysis concluded there were no "show stopper" issues in the recommendation of Option 1 and that the IETF MPLS and Pseudowire architecture could be extended to support transport functional requirements. Therefore, the team believed that there was no need for the analysis of any other option.

The JWT proposed that the MPLS Interoperability Design Team (MEAD Team), JWT, and Ad Hoc T-MPLS groups continue as described in SG15 TD515/PLEN [JWTcreation] with the following roles:

Facilitate the rapid exchange of information between the IETF and ITU-T,

Ensure that the work is progressing with a consistent set of priorities,

Identify gaps/inconsistencies in the solutions under development,

Propose solutions for consideration by the appropriate WG/ Question,

Provide guidance when work on a topic is stalled or a technical decision must be mediated.

None of these groups would have the authority to create or modify IETF RFCs or ITU-T Recommendations. Any such work would be progressed via the normal process of the respective standards body. Direct participation in the work by experts from the IETF and ITU-T would be required.

The JWT recommended that the normative definition of the MPLS-TP that supports the ITU-T transport network requirements be captured in IETF RFCs. It proposed that the ITU-T should:

Develop ITU-T Recommendations to allow MPLS-TP to be integrated with current transport equipment and networks, including in agreement with the IETF, the definition of any ITU-T-specific functionality within the MPLS-TP architecture via the MPLS change process [RFC4929],

Revise existing ITU-T Recommendations to align with MPLS-TP,

ITU-T Recommendations will make normative references to the appropriate RFCs.

The executive summary contains a number of detailed JWT recommendations to both IETF and ITU-T management together with proposed document structure and timetable.

These JWT recommendations were accepted by ITU-T management [MPLS-TP1].

3. Introduction and Background Material

Slides 11 to 22 provide introductory and background material.

The starting point of the analysis was to attempt to satisfy Option 1 by showing the high-level architecture, any show stoppers, and the design points that would need to be addressed after the decision had been made to work together. Option 1 was stated as preferred by the IETF and because Option 1 was shown to be feasible, Option 2 was not explored.

The work was segmented into five groups looking at: Forwarding, OAM, Protection, Control Plane, and Network Management. The outcome of each review was reported in the following sections and is summarized below.

There follows a detailed description of the overall requirements and architectural assumptions that would be used in the remainder of the work.

4. High-Level Architecture

Slides 23 to 28 provide a high-level architectural view of the proposed design.

The spectrum of services that the MPLS-TP needs to address and the wider MPLS context is described, together with the provisioning issues. Some basic terminology needed in order to understand the MPLS-TP is defined and some context examples are provided.

5. OAM and Forwarding

Slides 29 to 32 describe the OAM requirements and talk about segment recovery and node identification.

Slides 33 to 38 introduce OAM hierarchy and describe Label Switched Path (LSP) monitoring, the Maintenance End Point (MEP) and Maintenance Intermediate Point (MIP) relationship and the LSP and pseudowire (PW) monitoring relationship.

Sides 39 to 46 introduce the Associated Channel Header (ACH) and its generalization to carry the OAM over LSPs through the use of the "Label for You" (LFU).

Slides 47 to 48 provide a description of how the forwarding and the ACH OAM mechanism work in detail. A significant number of scenarios are described to work through the operation on a case-by-case basis. These slides introduce a new textual notation to simplify the description of complex MPLS stacks.

Note that the MPLS forwarding, as specified by IETF RFCs, requires no changes to support MPLS-TP.

6. Control Plane

Sides 79 to 83 discuss various aspects of the control plane design.

Control plane sub-team stated that existing IETF protocols can be used to provide required functions for transport network operation and for data-communications-network/switched-circuit-network operation. IETF GMPLS protocols have already applied to Automatic Switched Optical Network (ASON) architecture, and the JWT considered that any protocol extensions needed will be easy to make. The slides provide a number of scenarios to demonstrate this conclusion.

7. Survivability

The survivability considerations are provided in slides 95 to 104.

The survivability sub-team did not find any issues that prevented the creation of an MPLS-TP, and therefore recommended that Option 1 be selected. Three potential solutions were identified. Each solution has different attributes and advantages, and it was thought that further work in the design phase should eliminate one or more of these options and/or provide an applicability statement.

After some clarifications and discussion, there follow in the slide set a number of linear and ring protection scenarios with examples of how they might be addressed.

8. Network Management

Slide 106 states the conclusion of the Network Management sub-team : that it found no issues that prevent the creation of an MPLS-TP and hence Option 1 can be selected.

9. Summary

Slide 113 provides a summary of the JWT report.

The JWT found no show stoppers and unanimously agreed that they had identified a viable solution. They therefore recommend Option 1. They stated that in their view, it is technically feasible that the existing MPLS architecture can be extended to meet the requirements of a Transport profile, and that the architecture allows for a single OAM technology for LSPs, PWs, and a deeply nested network. From probing various ITU-T Study Groups and IETF Working Groups it appears that MPLS reserved label 14 has had wide enough implementation and deployment that the solution may have to use a different reserved label (e.g., Label 13). The JWT recommended that extensions to Label 14 should cease.

The JWT further recommended that this architecture appeared to subsume Y.1711, since the requirements can be met by the mechanism proposed in their report.

10. IANA Considerations

There are no IANA considerations that arise from this document.

Any IANA allocations needed to implement the JWT recommendation will be requested in the Standards-Track RFCs that define the MPLS-TP protocol.

11. Security Considerations

The only security consideration that arises as a result of this document is the need to ensure that this is a faithful representation of the JWT report.

The protocol work that arises from this agreement will have technical security requirements that will be identified in the RFCs that define MPLS-TP.

12. The JWT Report

In the PDF of this RFC, there follows the JWT report as a set of slides.

MPLS Architectural Considerations for a Transport Profile

ITU-T - IETF Joint Working Team
Dave Ward, Malcolm Betts, ed.

April 18, 2008

Table of Contents

- Executive Overview
  - Recommendation
- Introduction and Background Material
- High Level Architecture
- OAM Requirements
- OAM Mechanisms and Baseline Use Cases
- Associated Channel Level (ACH)
- Forwarding and OAM
  - LSP/PW OAM
  - Use Case Scenario and Label Stack Diagrams
  - Use of TTL for MIP OAM alert
  - Packet Context
- Control Plane
- Survivability
- Network Management
- Summary

Executive Summary

Recommendation

- Consensus on recommendation of Option 1
  - Jointly agree to work together and bring transport requirements into the IETF and extend IETF MPLS forwarding, OAM, survivability, network management and control plane protocols to meet those requirements through the IETF Standards Process
  - The Joint Working Team believes this would fulfill the mutual goal of improving the functionality of the transport networks and the internet and guaranteeing complete interoperability and architectural soundness
  - Refer to the technology as the Transport Profile for MPLS (MPLS-TP)
  - Therefore, we recommend that future work should focus on:
    - In the IETF: Definition of the MPLS “Transport Profile” (MPLS-TP)
    - In the ITU-T:
      - Integration of MPLS-TP into the transport network
      - Alignment of the current T-MPLS Recommendations with MPLS-TP and,
      - Terminate the work on current T-MPLS
- The technical feasibility analysis demonstrated there were no “show stopper” issues in the recommendation of Option 1 and that the IETF MPLS and Pseudowire architecture could be extended to support transport functional requirements
  - Therefore the team believed that there was no need for the analysis of any other option

Future inter-SDO organizational structure

- It is proposed that the MPLS interop design team, JWT and ad hoc T-MPLS groups continue as described in SG15 TD515/PLEN with the following roles:
  - Facilitate the rapid exchange of information between the IETF and ITU-T
  - Ensure that the work is progressing with a consistent set of priorities
  - Identify gaps/inconsistencies in the solutions under development
    - Propose solutions for consideration by the appropriate WG/Question
  - Provide guidance when work on a topic is stalled or technical decision must be mediated
- None of these groups has the authority to create or modify IETF RFCs or ITU-T Recommendations
  - Any such work will be progressed via the normal process of the respective standards body
  - Direct participation in the work by experts from the IETF and ITU-T is required

Role for the IETF MPLS Interoperability Design Team

- The IETF MPLS Interoperability Design Team should be chartered to produce an MPLS-TP architectural documentation hierarchy
  - All documents would progress in appropriate IETF WGs according to the normal process
  - The list of specific documents to be written in the IETF will be created by the Design Team
    - To allow rapid development of the architectural foundation documents no additional work on MPLS-TP will be taken on until the architectural foundation RFCs have progressed into WG LC
  - The Design Team is the group sponsored by the Routing Area Directors to facilitate rapid communication and coherent and consistent decision making on the Transport Profile for MPLS
  - An example of such a tree (by functional area) is below:

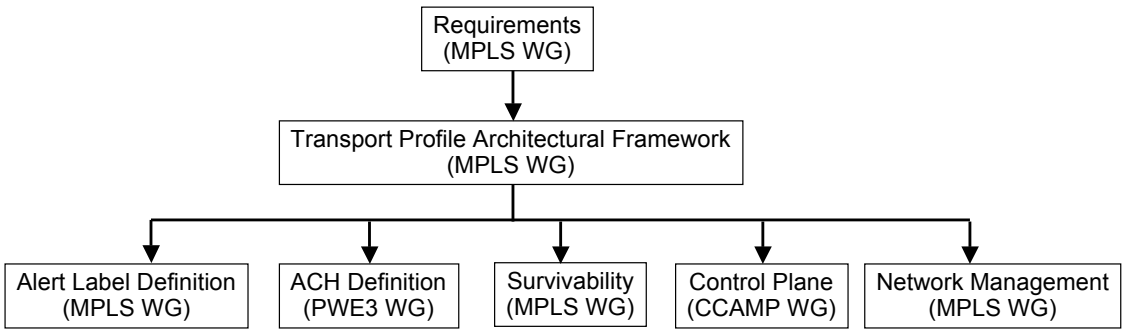

Development of RFCs on MPLS-TP

- Work areas will be assigned to the appropriate IETF Working Groups to develop the RFCs
  - Working group charters and milestones will be updated to reflect the new work
    - Expected to be completed before IETF 72 (July 2008)
    - This will include the list of documents in the architectural hierarchy
  - WGs will appoint authors and where appropriate form design teams to develop the RFCs
    - It is assumed that ITU-T participants will be active members of these design teams
    - The draft will be reviewed by the ITU-T prior to completion of WG last call
      - ITU-T review will be by correspondence, the results of this review will be conveyed via a liaison statement
        - » Review by correspondence will avoid delaying WG last call to align with an ITU-T SG/experts meeting
        - » Early communication via liaisons and the JWT should allow us to avoid major comments on the final documents
    - Apply for early allocation of RFC numbers and IANA codepoints once a document has completed IESG review

Development of ITU-T Recommendations on MPLS-TP

- The normative definition of the MPLS-TP that supports the ITU-T transport network requirements will be captured in IETF RFCs
- The ITU-T will:
  - Develop Recommendations to allow MPLS-TP to be integrated with current transport equipment and networks
    - Including in agreement with the IETF, the definition of any ITU-T specific functionality within the MPLS-TP architecture
      - Via the MPLS change process (RFC 4929)
    - Revise existing Recommendations to align with MPLS-TP
  - It is anticipated that following areas will be in scope. The actual Recommendations will be identified by the questions responsible for the topic areas.
    - Architecture (e.g. G.8110.1)
    - Equipment (e.g. G.8121)
    - Protection (e.g. G.8131, G.8132)
    - OAM (e.g. G.8113, G.8114)
    - Network management (e.g. G.7710, G.7712, G.8151, …)
    - Control plane (e.g. G.7713, G.7715, …)
  - ITU-T Recommendations will make normative references to the appropriate RFCs

Development of ITU-T Recommendations on MPLS-TP - 2

- Work areas will be assigned to the Questions as defined in COM 15 - C1 (Questions allocated to SG15)
  - Work will be progressed in each question
    - Direct participation by interested parties from the IETF is strongly encouraged
    - Draft versions of Recommendations will be provided to the IETF for review via a liaison to a WG and/or via the JWT
  - It is anticipated that approval will be using AAP as defined in Recommendation A.8
    - Interim WP meetings may be required to allow timely consent of Recommendations that rely on normative references to RFCs
    - Final text for consent will be provided to the IETF for review
      - Initiation of the AAP process should be timed such that members can base AAP comments on an appropriate IETF WG consensus review of the consented text
      - Early communication via liaisons and the JWT should allow us to avoid major comments on the final documents
        - » e.g. the draft Recommendation for consent should be sent to the IETF for review prior to the SG meeting

Documentation schedule

- First draft of the Transport Profile Architectural Framework
  - IETF 72 (July 2008)
  - WG last call completion Q2/2009
- Draft to request new reserved label for MPLS TP alert
  - IETF 72 (July 2008)
- RFCs on Alert Label and ACH definition
  - WG last call completion Q2/2009
- Updated ITU-T Recommendations
  - Q2/2009 (may need to schedule experts meeting/WP plenary to avoid delaying consent to the October 2009 meeting of SG 15)

A significant amount of work is required to achieve these milestones
- We need to start immediately (May 2008)
- Need a commitment from interested parties to edit and drive the drafts

Introduction and Background Material

What am I reading?

- This presentation is a collection of assumptions, discussion points and decisions that the combined group has had during the months of March and April, 2008
  - This represents the agreed upon starting point for the technical analysis of the T-MPLS requirements from the ITU-T and the MPLS architecture to meet those requirements
- The output of this technical analysis is the recommendation given to SG 15 on how to reply to the IETF's liaison of July 2007
  - IETF requested decision on whether the SDOs work together and extend MPLS aka "option 1: or
  - ITU-T choose another ethertype and rename T-MPLS to not include the MPLS moniker aka "option 2"
- The starting point of the analysis is to attempt to satisfy option 1 by showing the high level architecture, any showstoppers and the design points that would need to be addressed after the decision has been made to work together.
  - Option 1 was stated as preferred by the IETF and if it can be met; Option 2 will not be explored

Some contributors to this architecture

- BT
- Verizon
- ATT
- NTT
- Comcast
- Acreo AB
- Alcatel-Lucent
- Cisco
- Ericsson
- Huawei
- Juniper
- Nortel
- Old Dog Consulting

How is the effort organized?

1. In ITU-T
   TMPLS ad hoc group
2. In IETF
   MPLS interoperability design team
3. DMZ between the SDOs: Joint Working Team

- Segmented into groups looking at
  1. Forwarding
  2. OAM
  3. Protection
  4. Control Plane
  5. Network Management
- Goal: Produce a technical analysis showing that MPLS architecture can perform functionality required by a transport profile.
  Compare w/ ITU-T requirements and identify showstoppers
  Find any obvious design points in MPLS architecture that may need extensions

MPLS - Transport Profile: What are the problems?

- Desire to statically configure LSPs and PWEs via the management plane
  - Not solely via control (routing/signaling) plane
  - If a control plane is used for configuration of LSPs/PWEs failure and recovery of the control plane must not impact forwarding plane (a la NSR/NSF)
- Transport OAM capabilities don't exist for LSP and PWE independent of configuration mechanism (management plane or GMPLS or PWE control plane)
  - Full transport FCAPS - AIS, RDI, Connection verification (aka connectivity supervision in G.806), loss of connectivity (aka continuity supervision in G.806), support of MCC and SCC etc
  - Recent drafts to IETF demonstrate some issues
- Service Providers are requesting consistent OAM capabilities for multi-layered network and interworking of the different layers/technologies (L2, PWE, LSP)
  - Include functionality of Y.1711 and Y.1731 into one architecture

MPLS -TP: What are the problems? 2

- Service Providers want to be able to offer MPLS LSPs and PWEs as a part of their transport offerings and not just associated with higher level services (e.g. VPNs)
- Service Providers want LSPs/PWEs to be able to be managed at the different nested levels seamlessly (path, segment, multiple segments)

  aka Tandem Connection Monitoring (TCM), this is used for example when a LSP/PWE crosses multiple administrations
- Service Providers want additional protection mechanisms or clear statements on how typical "transport" protection switching designs can be met by the MPLS architecture
- Service Providers are requesting that OAM and traffic are congruent

  Including scenarios of LAG or ECMP

  Or create LSP/PWEs that don't traverse links with LAG/ECMP

MPLS - TP Requirements Overview

- Meet functional requirements stated earlier by service providers
- No modification to MPLS forwarding architecture
- Solution Based on existing Pseudo-wire and LSP constructs
- Bi-directional congruent p2p LSPs
- No LSP merging (e.g. no use of LDP mp2p signaling in order to avoid losing LSP head-end information)
- Multicast is point to multipoint not MP2MP

MPLS - TP Requirements Overview .2

- OAM function responsible for monitoring the LSP/PWE
  - Initiates path recovery actions
- IP forwarding is not required to support of OAM or data packets
  - OOB management network running IP is outside scope of feasibility study
- Can be used with static provisioning systems or with control plane
  - With static provisioning, no dependency on routing or signaling (e.g. GMPLS or, IGP, RSVP, BGP, LDP)
- Mechanisms and capabilities must be able to interoperate with existing MPLS and PWE control and forwarding planes

MPLS-TP Major Solution Constructs

NOTE: These two constructs were used as the basis for the Technical Feasibility study performed by the ad hoc team, JWT and IETF MPLS Interoperability Design Team

1. Definition of MPLS-TP alert label (TAL) and a Generic Associated Channel (GE ACH)
   - Allows OAM packets to be directed to an intermediated node on a LSP/PWE
     - Via label stacking or proper TTL setting
   - Define a new reserved label (13 is suggested):
     - It is believed that Label 14 cannot be reused at this point
2. Generic Associated Channel (GE ACH) functionality supports the FCAPS functions by carrying OAM, APS, ECC etc. packets across the network
   - Use of PWE-3 Associated Channel to carry OAM packets
   - GE ACH are codepoints from PWE ACH space but, not necessarily, for PWE purposes
   - GE ACH would be present for OAM of all LSPs

MPLS-TP Major Solution Observations

1. Bringing ACH functionality into LSPs begins to blur the architectural line between an MPLS LSP and an MPLS Pseudowire
   - The functional differences between an MPLS LSP and MPLS PW must be retained in the architecture
2. The same OAM mechanism (e.g. ACH) can be unified for LSPs and PWE
   - Enabling the same functionality for both and ease of implementation
   - Avoid breaking anything (e.g. ECMP)
   - There may be specific differences that are discovered in design phase
   - ACH functionality for LSPs should be limited to only OAM, APS & ECC management channel data
3. A great deal of IETF protocol, design and architectural reuse can be employed to solve the requirements
   - No fundamental change to the IETF MPLS architecture was found to be necessary

MPLS-TP Alert Label Observations - 1

- The JWT has established that to create an MPLS-TP there is a need for an associated channel that shares fate and coexists with data
- One possibility would be to use the OAM Alert Label (label 14) to establish this channel but:
- IETF WGs and ITU-T SGs were polled to find out the state of implementation and deployment of Y.1711 and RFC3429
  - The conclusion was that there are enough implementations and deployments so that it is not possible to immediately deprecate Y.1711 and RFC3429

MPLS-TP Alert Label Observations - 2

- The JWT has concluded that a new reserved label may be needed for the MPLS TP alert
- This label would be requested from the pool of un-allocated reserved MPLS labels

  Label 13 has been suggested.
- The suggested roadmap is to gradually move all OAM functionality defined by label 14 over to the new reserved label
- The specification of the new OAM channel must be accompanied with a decision to stop further extension of OAM based on label 14

  Only maintenance operations continue

High Level Architecture

MPLS-TP service spectrum

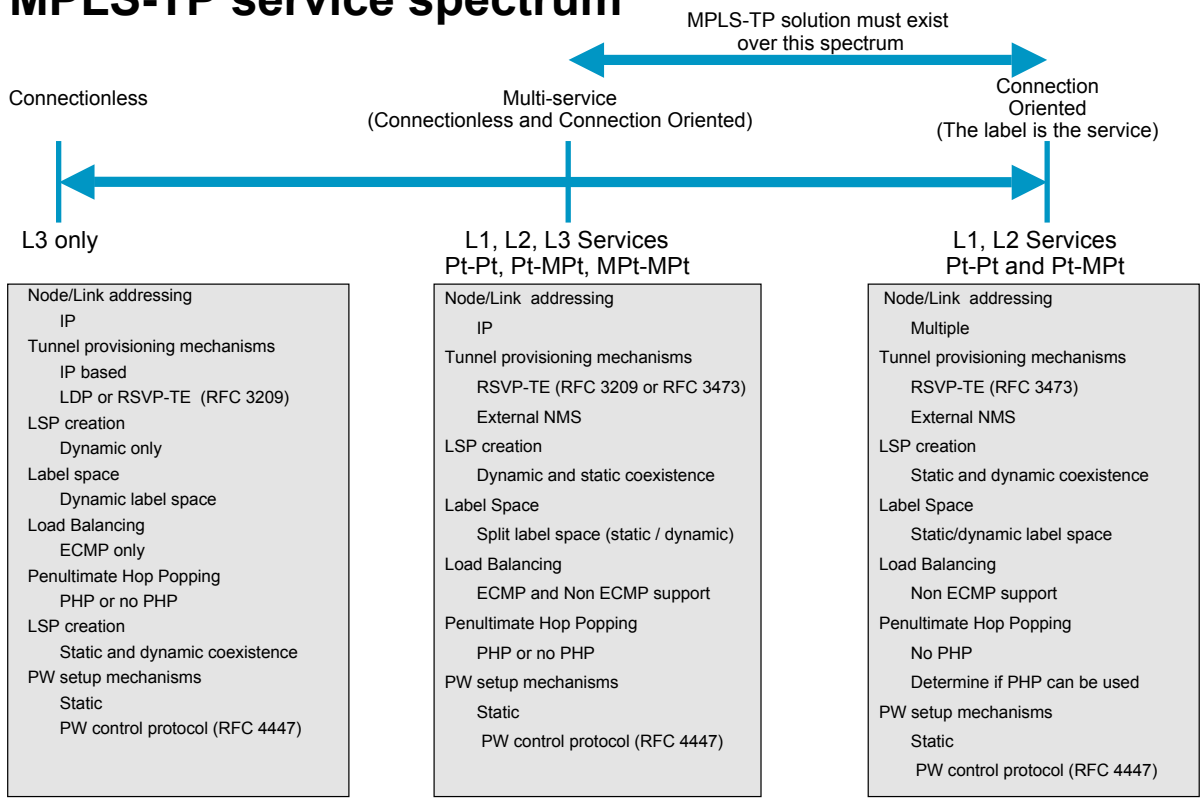

- IMPERATIVE MPLS-TP MUST BE ABLE TO INTEROPERATE IN AN L3 NETWORK
- MPLS-TP MUST ALSO SUPPORT AND CO-EXIST WITH EXISTING PWE-3 SOLUTIONS

MPLS+TP Static Provisioning

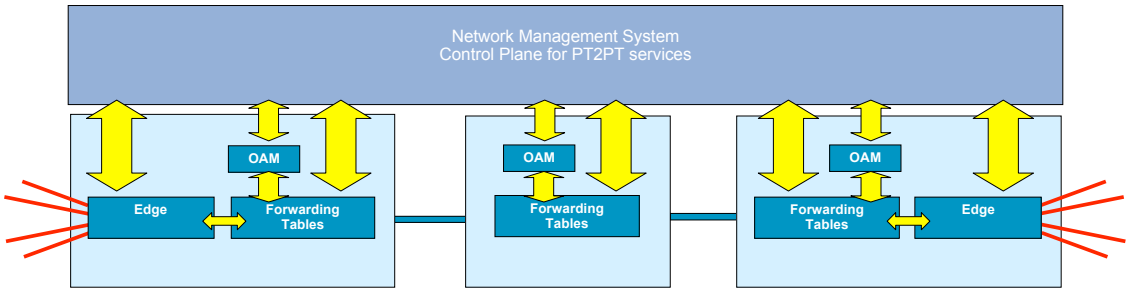

- Static provisioning and dynamic control plane
  - Requirements state that the solution must include static only provisioning
  - Any dynamic Control plane will be based on IETF solutions (GMPLS, IP/MPLS)
- Control Plane responsible for:
  - End to End, Segment LSPs and PWE-3 application labels (programming the LFIB)
  - Determining and defining primary and backup paths
  - Configuring the OAM function along the path
  - Others : Defining the UNI etc
- OAM responsible for monitoring and driving switches between primary and backup paths for the end to end path and path segments

MPLS Transport Profile - Terminology

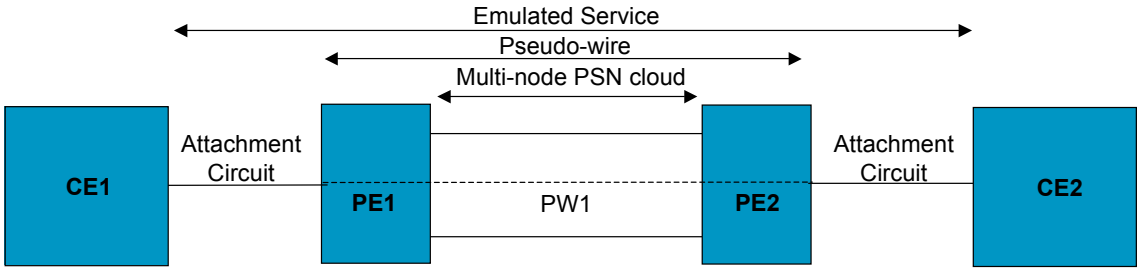

- Definition of an MPLS Transport Profile (TP) within IETF MPLS standards
  - Based on PWE3 and LSP forwarding architecture
  - IETF MPLS architecture concepts
- The major construct of the transport profile for MPLS are LSPs
  - PW are a client layer

LSP example

- end to end and per carrier monitoring

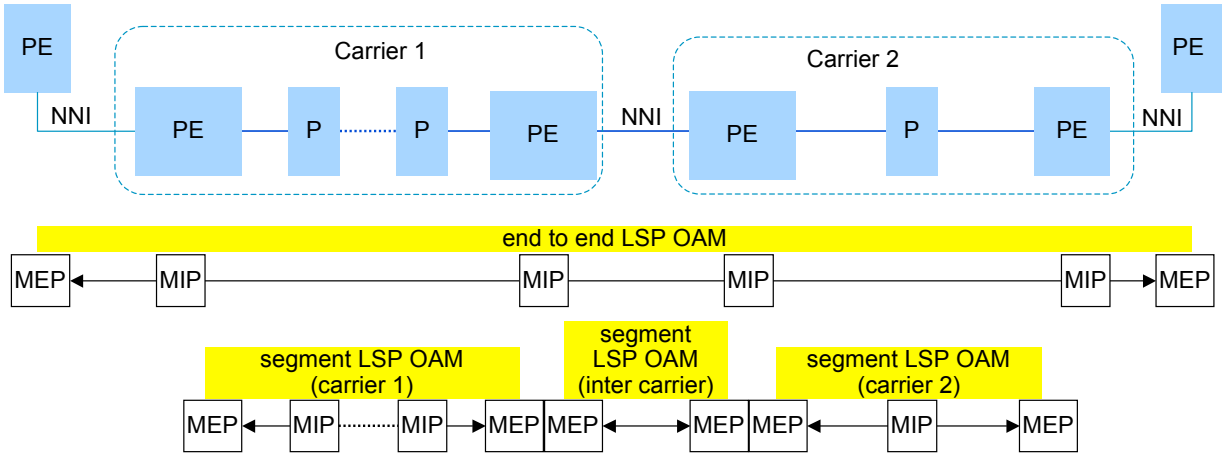

- A segment is between MEPs
- OAM is end to end or per segment
  - In SDH/OTN and Ethernet segment OAM is implemented using Tandem Connection Monitoring (TCM)
- The OAM in each segment is independent of any other segment
- Recovery actions (Protection or restoration) are always between MEPs i.e. per segment or end to end

Note: A policing function (traffic management/shaping) is normally co located with a MEP at a business boundary (UNI/NNI)

MEP: Maintenance End Point
MIP: Maintenance Intermediate Point

Bidirectional Paths

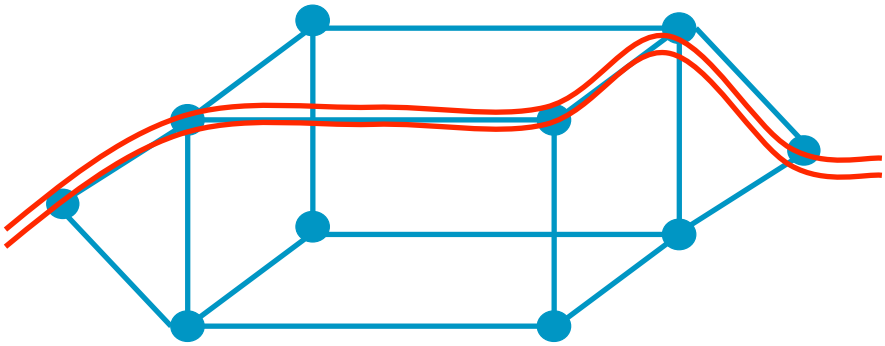

- External Static Provisioning
  NMS responsible for configuration and ensuring bi-direction congruency
- If Dynamic Control Plane
  GMPLS bidirectional RSVP for LSP path establishment

OAM requirements

OAM Requirements

- Must be able to monitor LSP, PWE3
  - Inter layer fault correlation
  - Failure indication propagation across multiple segments
  - Monitoring of Physical layer, layer 1, layer 2 is out of scope
- Packet loss rather than bit error based measurements/metrics for L2, LSP, PWE3
- Per segment (aka tandem connection) and end to end
  - Fault detection/isolation
  - Recovery - protection switch or restoration
- A security architecture

What is segment recovery?

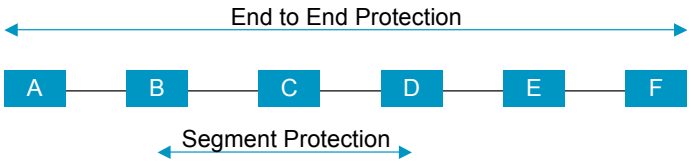

- End to End recovery:
  - Fault detection and recovery of the end to end pseudo-wire
  - Fault detection and recovery of the end to end LSP Segment recovery:
- Fault detection and recovery of a segment
  - The recovery mechanism used in a segment is independent of other segments
- Segment constructs
  - Hierarchical nested LSP: Existing construct
  - MS-PW segment: Currently defined construct in PWE3
  - Stacked TCM label (mapped 1:1 with corresponding LSP/PW)

Node identification

- Will need to work through identification requirements
  - What about algorithmically derived label from the IP identifier
  - What IP identifier if we do not need IP to support forwarding or OAM?
  - Need to be able to rearrange the DCC without disturbing the forwarding/OAM?

A node has multiple identifiers including the following:

- Management identifier – normally user friendly, based on the location
- MEP/MIP identifier
- DCC address - how do management messages reach this node
- Control plane identifiers - how are the various control components identified
- Forwarding plane identifier - end points and intermediate points - e.g. NNIs

These are design issues, no “show stoppers” found

OAM mechanisms

Overview: OAM hierarchy and mechanisms

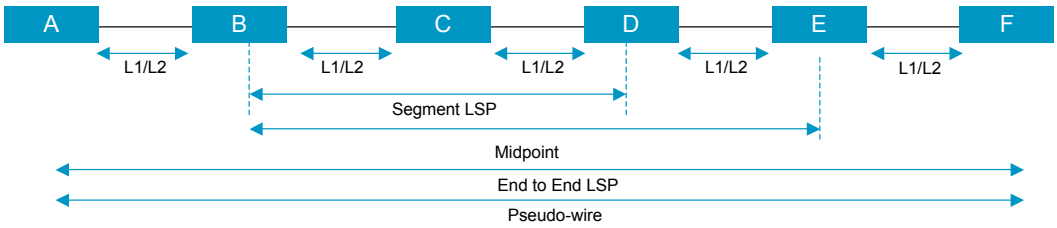

- L0/L1 : Loss of Light; G.709, SONET/SDH LoS, LoF, ES, SES (NOT DISCUSSED)
- Non MPLS L2 connectivity : Native L2 solution 802.1ag (Not Discussed) , Non IP BFD
  Failure propagation across layers is supported by this architecture
- General LSPs : Generic Exception Label and Generic Associated Channel
  Includes End to End and segment LSPs
  Used to carry a variety of OAM, Mgmt, signalling protocols.
- Pseudo-wires : PWE3 Associated Channel

LSP monitoring example
- monitoring within carrier 1

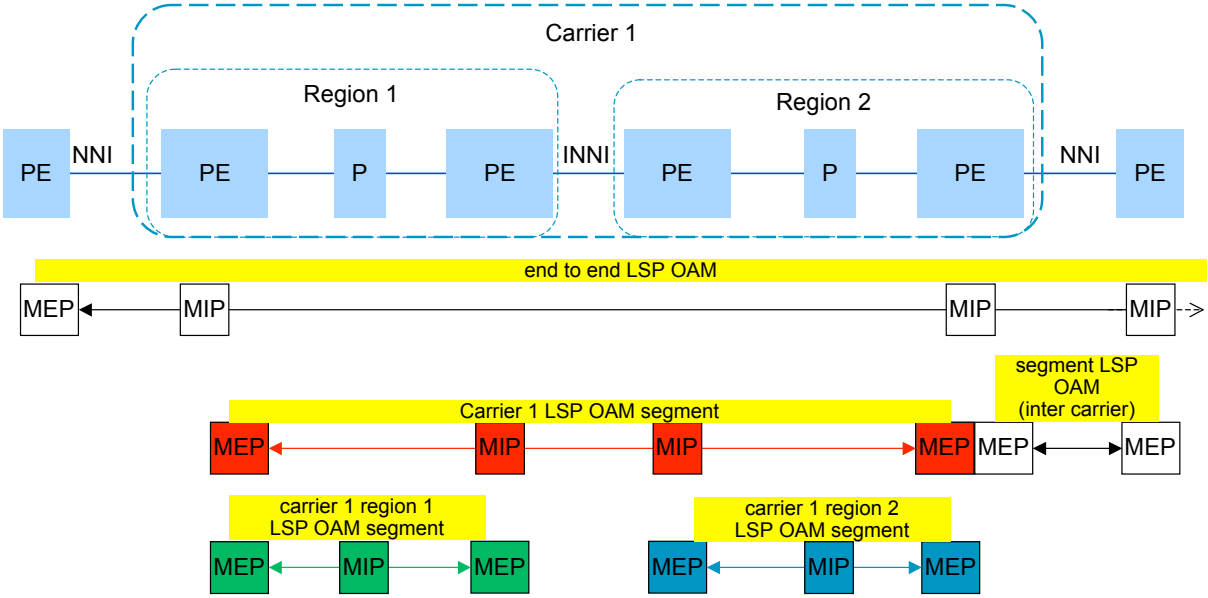

3 LSP OAM levels + PW OAM

- end to end LSP + 2 nested segment LSP levels (Carrier 1 + regions 1/2)
- Nested segments are supported by Tandem Connection Monitoring (TCM) in SDH/OTN and Y.1731

Carrier 1 example MEPs/MIPs relationships

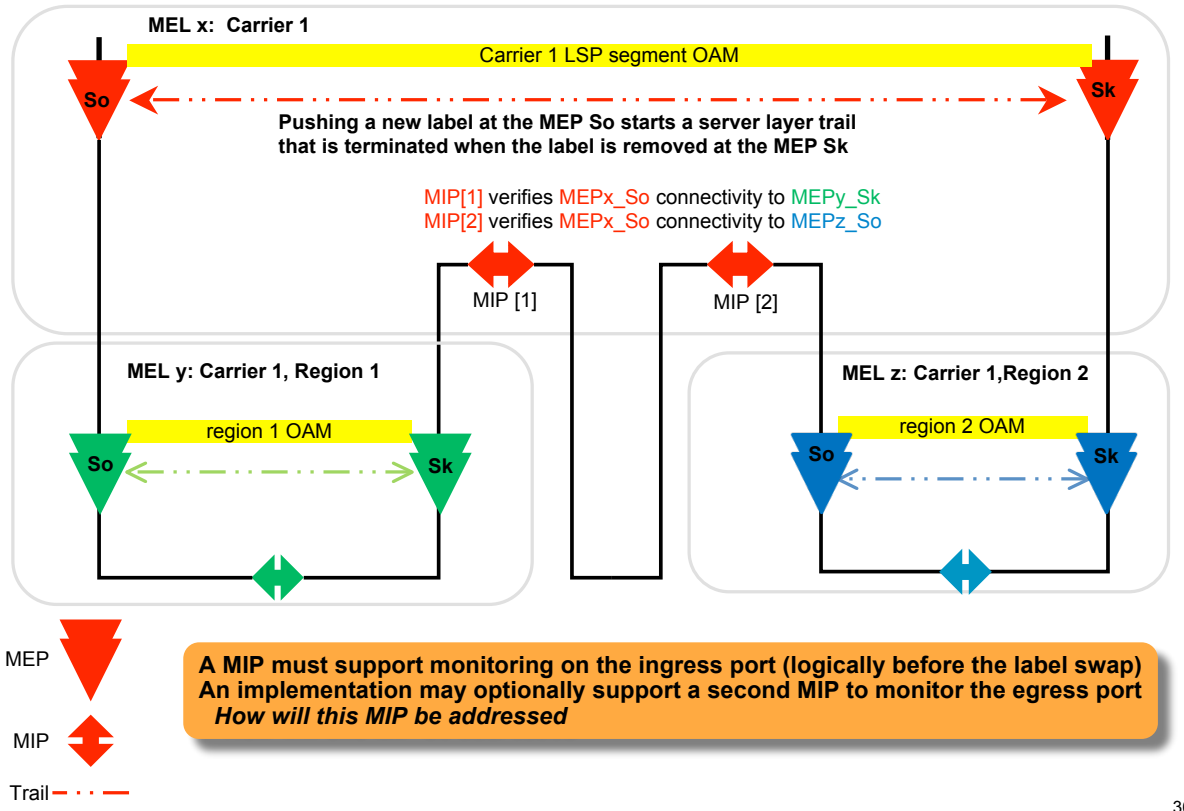

A MIP must support monitoring on the ingress port (logically before the label swap)
An implementation may optionally support a second MIP to monitor the egress port
How will this MIP be addressed

PW over LSP monitoring example

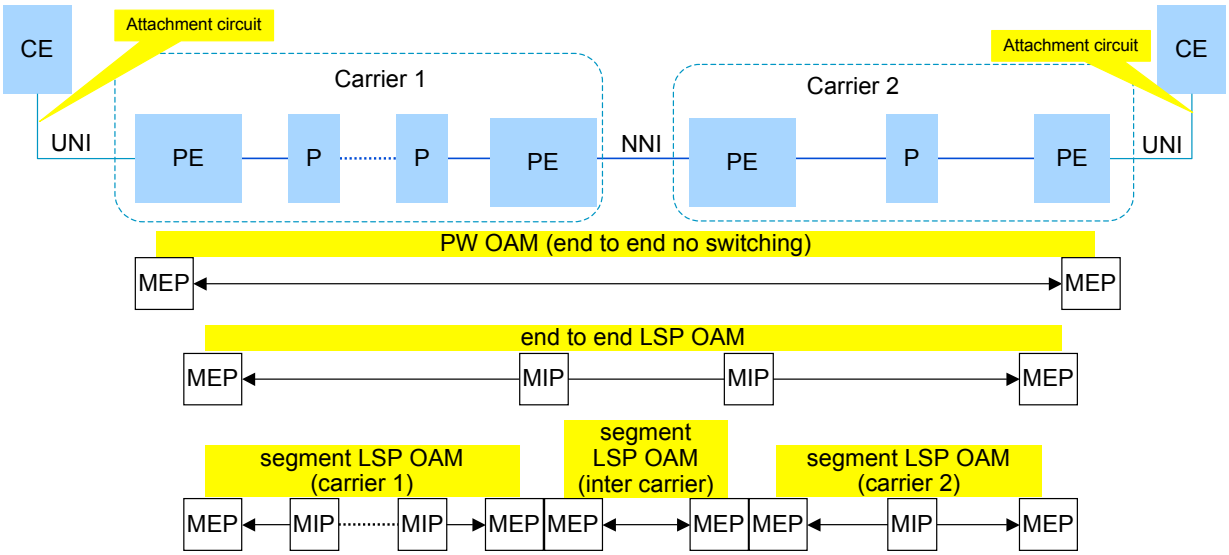

- end to end LSP OAM is used since PW OAM cannot create MIPs at the inter carrier boundary without a PW switching function

Note: A policing function (traffic management/shaping) is normally co located with a MEP at a business boundary (UNI/NNI)

MEP: Maintenance End Point
MIP: Maintenance Intermediate Point

PW over LSP example with PW switching

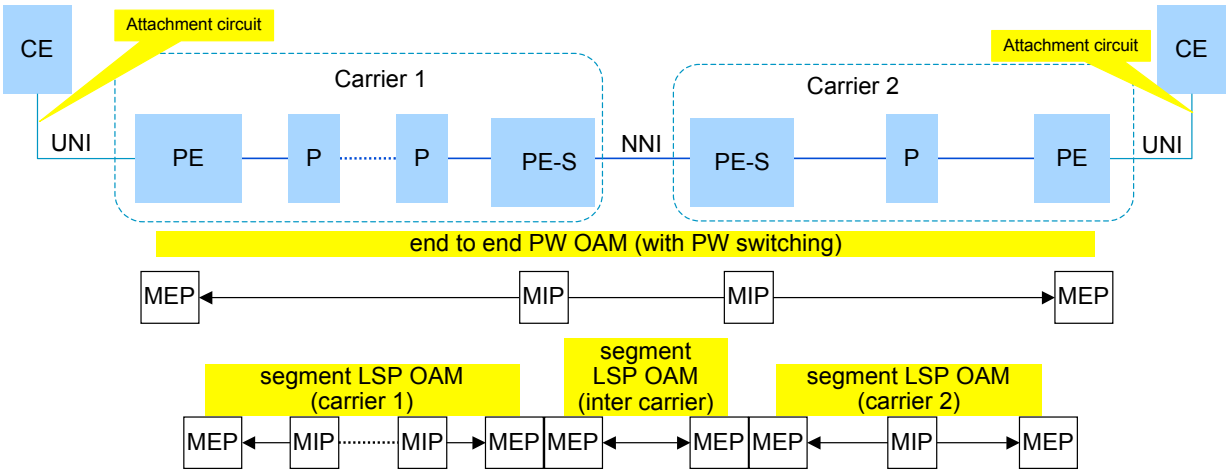

- end to end LSP OAM is not requires since the PW switching points can support a MIP

Note: A policing function (traffic management/shaping) is normally co located with a MEP at a business boundary (UNI/NNI)

MEP: Maintenance End Point
MIP: Maintenance Intermediate Point

Associated Channel Level (ACH)

Associated Channel Level ACH: Overview

- Generalised mechanism for carrying management / OAM information
  - OAM capabilities : Connectivity Checks (CC) and “Connectivity Verification” (CV)
  - Management information: Embedded Control Channel (ECC)
    - To support the Data Communications Network (DCN) and the Signalling Communication Network (SCN) – see G.7712
  - APS information
- Associated Channel Capabilities
  - Multiple channels can exist between end points
  - Channel Type Indicates what protocol that is carried
  - To service an MPLS-TP network new channel types will need to be defined
- Management and Control Plane Information (DCN and SCN connectivity)
  - Via ECC where IP is not configured
- Generic ACH contains a “channel Type” field
  - Need for a registry of protocols
  - This needs to be blocked for different functions
  - (IP-Free BFD is currently 7)
    - We may want to define a vendor specific and experimental range

No Showstoppers found

LSP monitoring and alarming
Generic Exception Label and Generic Associated Channel Proposal

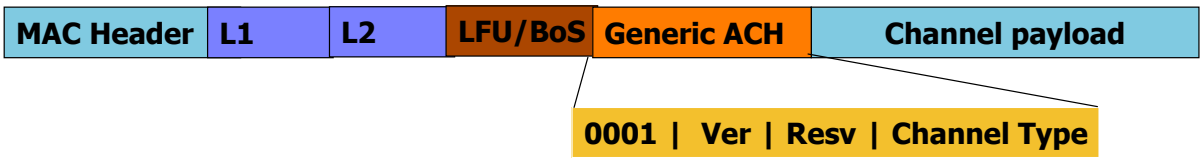

- Assign a Transport Alert Label as a Label For yoU (LFU) from reserved label space:
  - Label 13 has been proposed because,
  - Label 14 has been allocated to Y.1711
    - Y.1711 arch fits within “ACH” architecture
- Bottom of Stack is always set on LFU in the transport profile

- Define a Generic Associated Channel function
  - Similar to the PWE-3 Associated Channel but doesn’t have to be associated with a PW
  - Important the first nibble tells system not to load balance (so not 06 or 04)
- Generic Associated Channel is always under a Generic Exception Label if endpoint (MEP)
- Generalised Associated Channel defines what packet function using “channel type” field
  - Examples : What OAM function is carried, DCC, etc

Pseudo-wire monitoring and alarming
PWE-3 Control Word and PW-Associated Channel

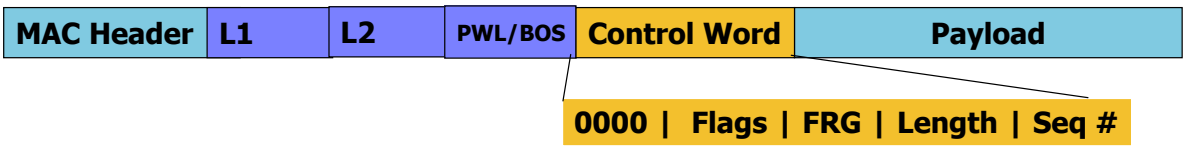

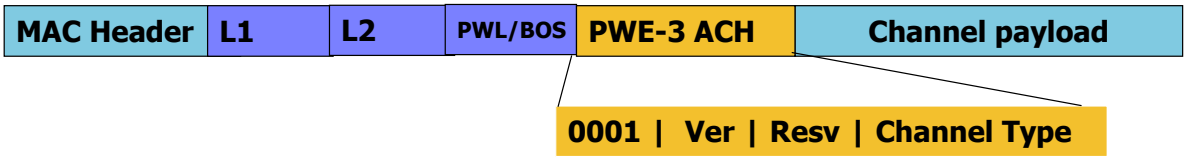

This is a representation of what is in RFC 4385

Required Functionality demarked by Associated Channel

- CV : Connectivity Verification (detection of configuration errors)
- PM: Performance of the path
- AIS: Alarm suppression
- CC : Continuity Check : Is the path present (may reuse vanilla BFD here)
  - Light weight
  - Role is as a CC protocol, it is not a CV protocol
  - Not a connectivity verification protocol
  - VCCV-BFD provides capabilities over pseudo-wire
- ECC
  - OSS and control plane communication
- APS
  - Protection switching coordination
- Accounting/Billing information
- Security exchange
- Extra codepoint space to define new or use existing protocols for other functions

Associated Channel Functionality Observations

- Existing MPLS LSP OAM uses an IP based control channel and could be used for some OAM functions in transport networks
  - e.g. CC/CV
  - The new Alert label based control channel should be able to co-exist with the existing MPLS LSP OAM functions and protocols
- OAM message formats and protocol details carried in the OAM channel will be discussed in the design phase
  - We must figure out what the OAM messages/protocols should be used for the new requirements
  - Decide whether LSP-Ping or BFD can or should be tweaked or not

Pseudo-wire OAM processing

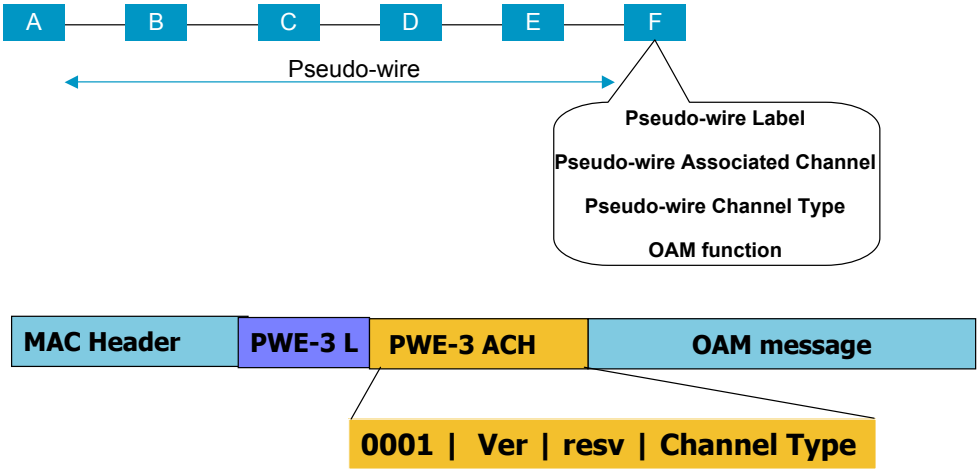

- Processed by the pseudo-wire function on the end-points
  - End point or Pseudo-wire stitch point
- Verifies the operational status of the pseudo-wire
- Working with the native attachment circuit technology
  - An inter-working function with the native attachment circuit OAM.
  - Transport and act upon native attachment circuit OAM technology

LSP End Point processing

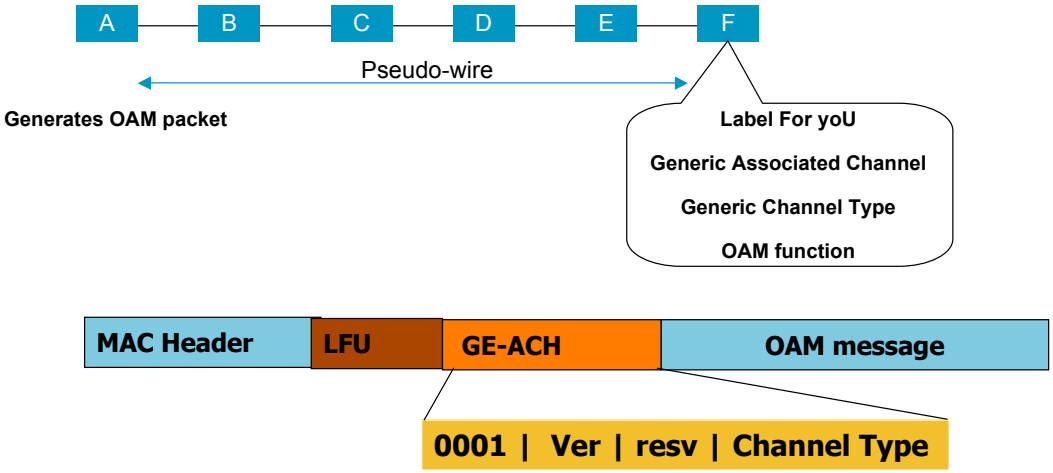

- Label For yoU with Generic Channel Association
- Processed by the LSP end point
  - End to End LSP or Segment LSP
- Verifies the operational status of the LSP
  - Many options including Non IP BFD is an option encapsulation of Y.1731 pdu

Forwarding and OAM:
LSPs / PW
OAM and Label Stacks

Scope of next slides

- Slides cover on MEP to MEP and MEP to MIP monitoring
  - Detailed OAM packet walkthrough not yet covered in this slide-set
  - For MIP monitoring traceroute or loopback is executed and TTL set accordingly
- Introduce concept of LSP/PW TCM label:
  - This is a label to indicate a tandem monitoring session context
  - Label is stacked above label of LSP or PW being monitored
  - 1 for 1 mapping between an LSP / PW and its TCM session. i.e. no multiplexing
  - Need mechanism to bind TCM label to underlying LSP or PW being monitored
- MEP to MIP
  - MEP sets the TTL of the LSP, TCM or PW label so that it will expire when the target MIP is reached
- PHP

No Showstoppers found

Notation and color conventions

- [Destination][(using label provided by)][optionalFEC]/[StackBit]
- Thus D(E)/0 means Destination is D, using label provided by (E) - i.e. c is the tunnel next hop and the Sbit is 0 - i.e. not bottom of stack.
- Thus E(E)p/1 means Destination is E, using label provided by (E) the FEC is a pseudowire and the Sbit is 1, i.e. bottom of stack
- Special Labels and terms

  LFU = Label For yoU - OAM alert label

  Ach = Associated Channel Header

  CW = Control Word

  P = PW FEC

Color Conventions

- LSP tandem OAM label
- LSP label
- PW tandem OAM label
- PW label
- PW control word
- Label For yoU
- ACH

Scenarios

- SS-PW over intra-domain LSP
  - No TCM OAM
  - TCM-LSP OAM
- SS-PW over inter-domain LSP
  - LSP, TCM LSP & PW OAM
- Intra-domain MS-PW
  - MS-PW TCM OAM
- Intra-domain MS-PW
  - LSP OAM and TCM-MS-PW OAM
- Inter-provider MS-PW
  - PW E2Eand PW TCM OAM
- SS-PW over Intra-domain LSP
  - LSP MEP->MIP OAM using TTL
- Intra-domain MS-PW
  - MS-PW OAM: PW MEP-MIP, No TCM
- Intra-domain MS-PW
  - MS-PW OAM: TCM MEP->MIP, plus E2E PW

Segment LSP setup

Starting Point

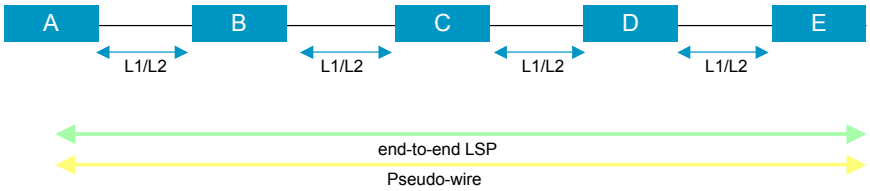

Final Point

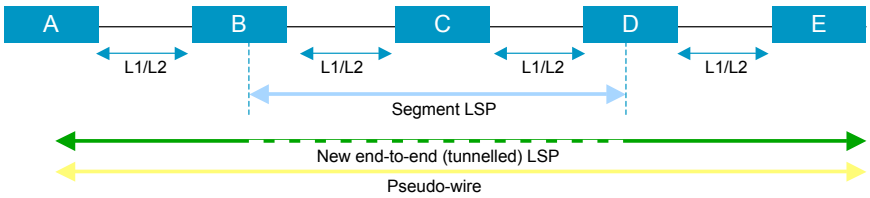

Objective:
Use bridge-and-roll with make-before-break mechanism to ensure transition

Segment LSP setup – G.805 view

Starting Point

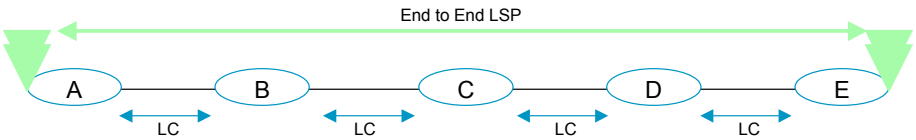

Final Point

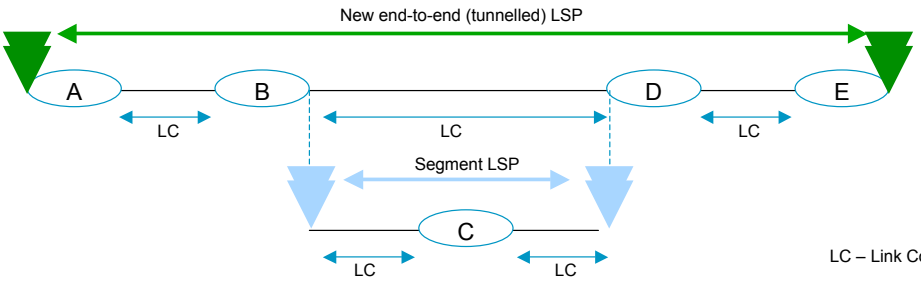

LC – Link Connection

Procedural Ordering Overview

- Step 1 : establish the segment LSP

  Question : can segment LSP and existing end-to-end LSP share bandwidth?

- Step 2 : establish a new end-to-end LSP and which must be tunnelled in the segment LSP

  Use MBB procedures (for sharing resources between existing and new end-to-end LSP).

- Step 3 : Perform switchover after Resv is received in A

  ITU-T mechanisms rely on the creation of a Protection Group between the old and new (tunnelled) end-to-end LSP, the forcing of protection switching via APS and the tearing down of the Protection Group

- Step 4 : Tear down the old end-to-end LSP

SS-PW, LSP OAM (no TCM)

LFU – Label For You (label 13)
ACh – Associated Channel
CW – Control Word

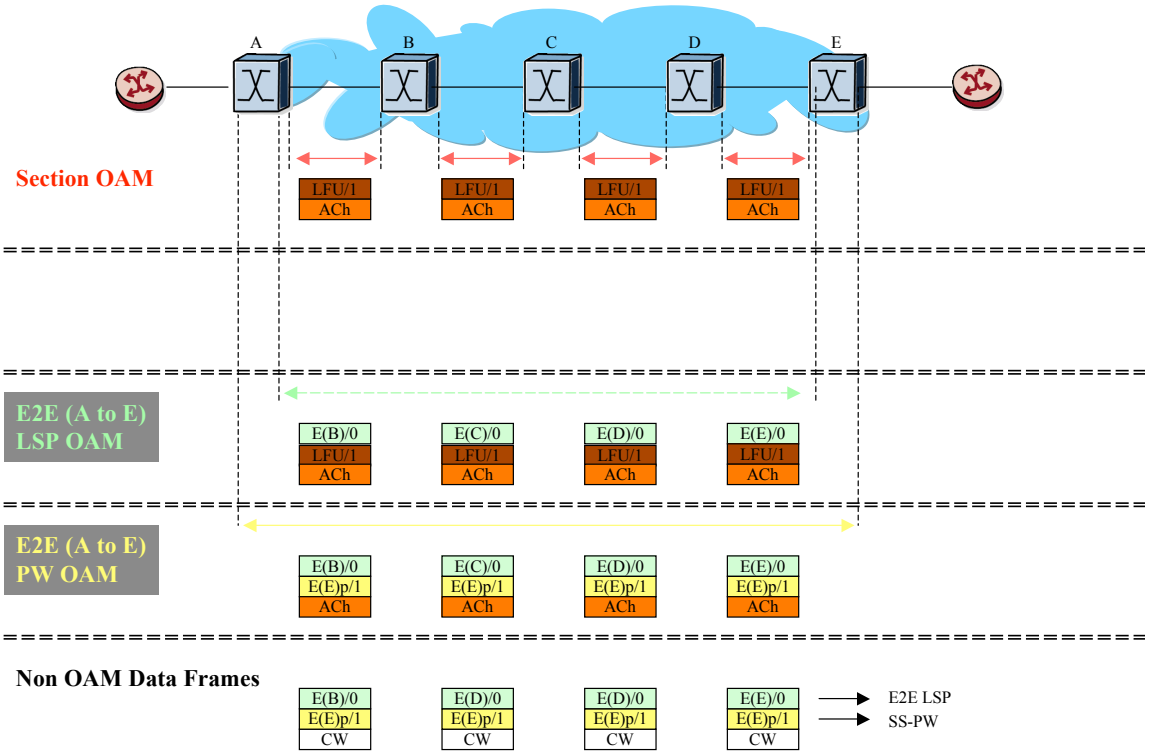

SS-PW over intra-domain LSP

LSP, TCM-LSP & PW OAM

LFU – Label For You (label 13)
ACh – Associated Channel
CW – Control Word

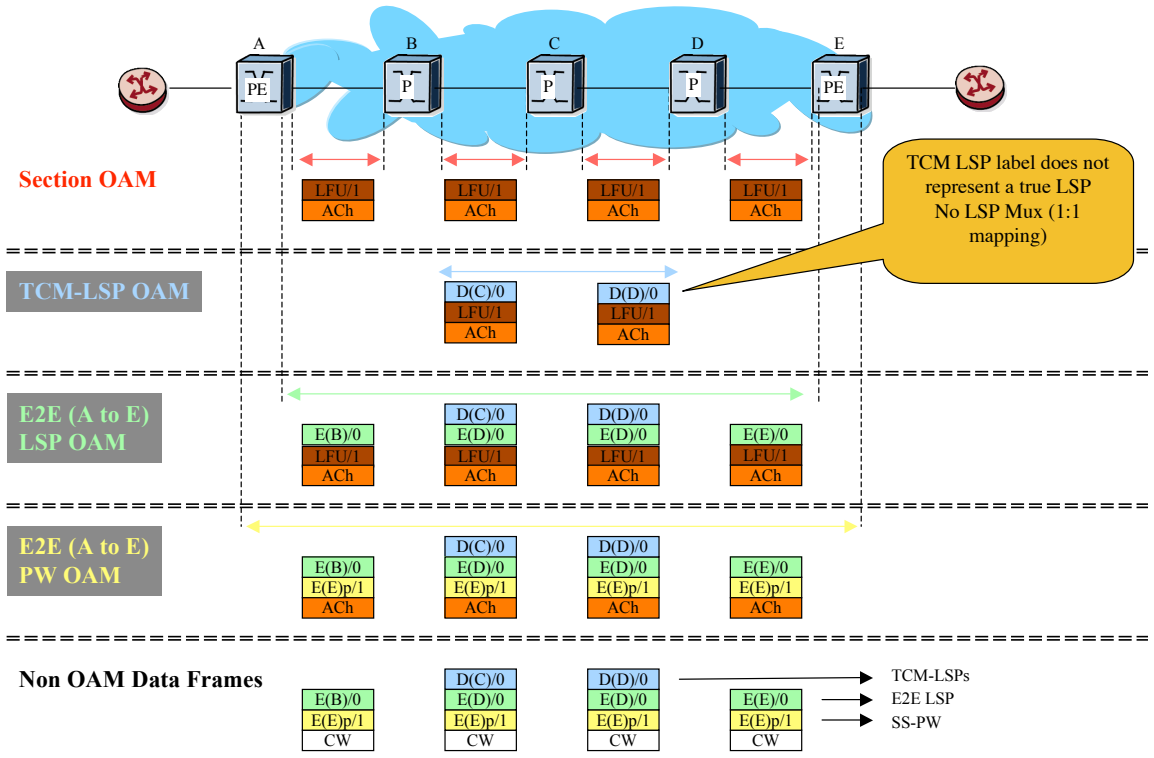

SS-PW over inter-provider LSP

LSP, TCM-LSP & PW OAM

LFU – Label For You (label 13)
ACh – Associated Channel
CW – Control Word

PB = Provider Border LSR

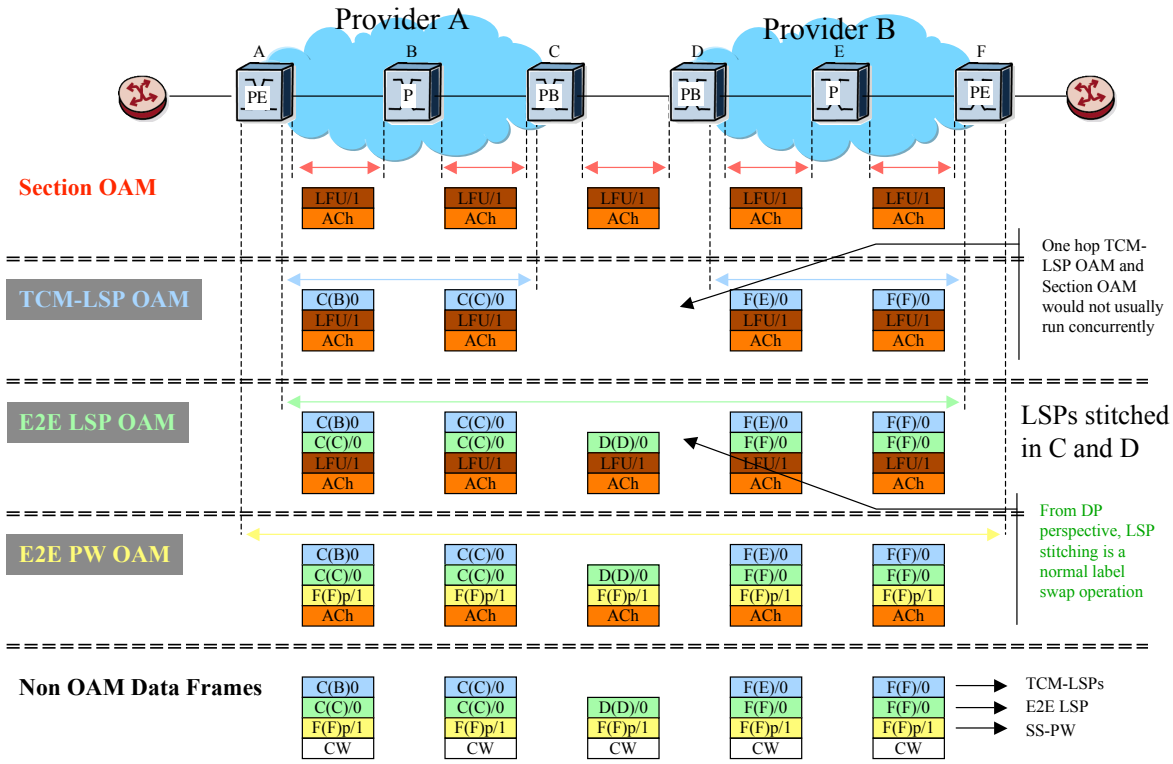

Intra-domain MS-PW

MS-PW & TCM-MS-PW OAM

LFU – Label For You (label 13)
ACh – Associated Channel
CW – Control Word

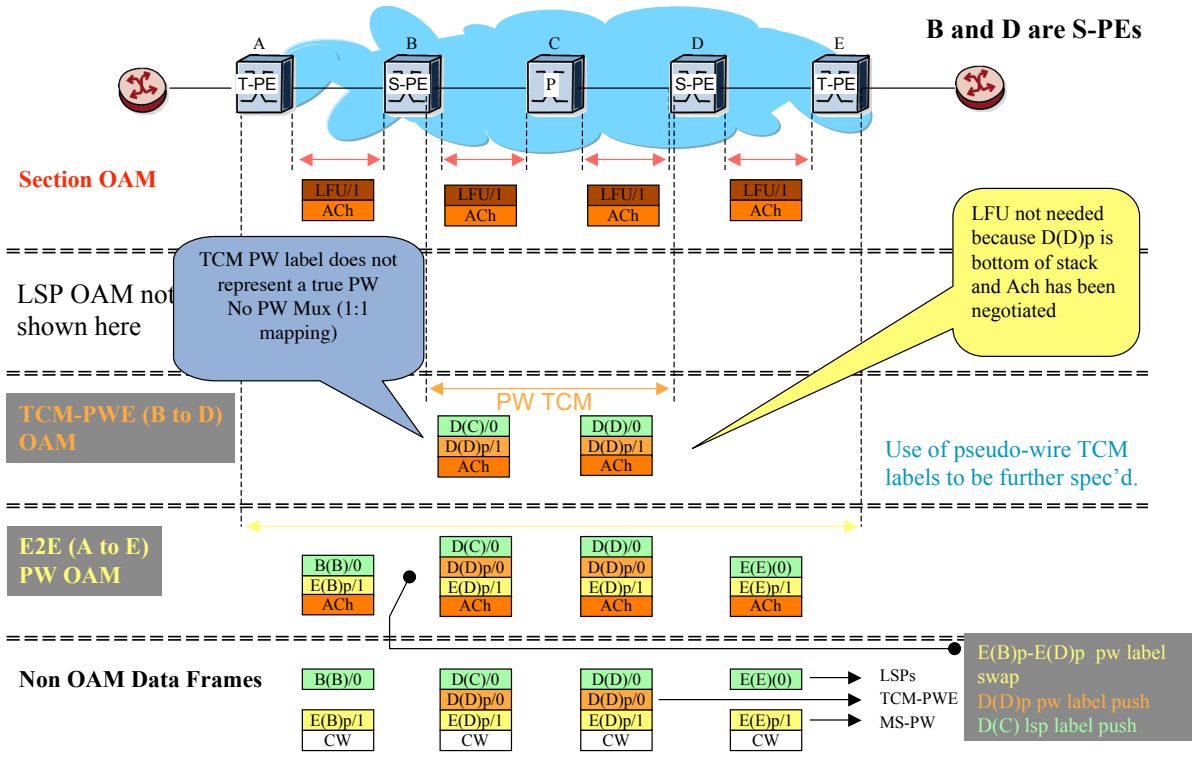

Intra-domain MS-PW

LSP, MS-PW & TCM-MS-PW OAM

LFU – Label For You (label 13)
ACh – Associated Channel
CW – Control Word

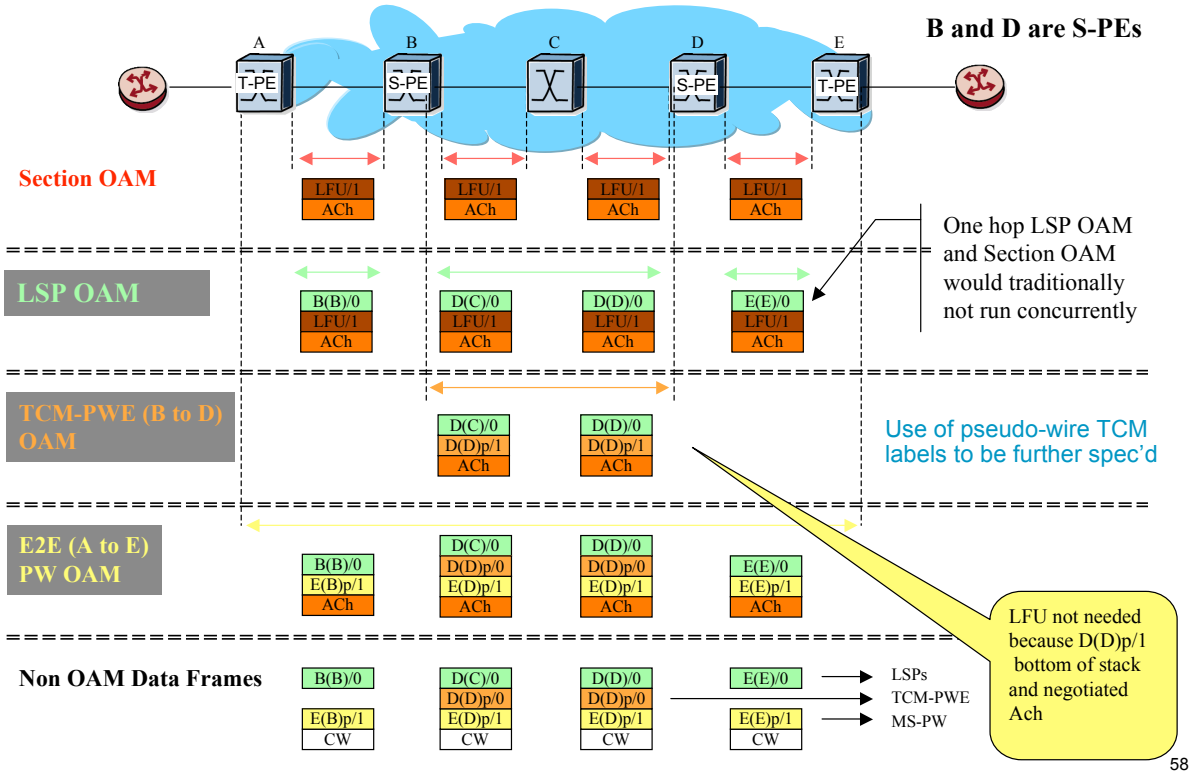

Inter-provider MS-PW

LSP, MS-PW & TCM-MS-PW OAM

LFU – Label For You (label 13)
ACh – Associated Channel
CW – Control Word

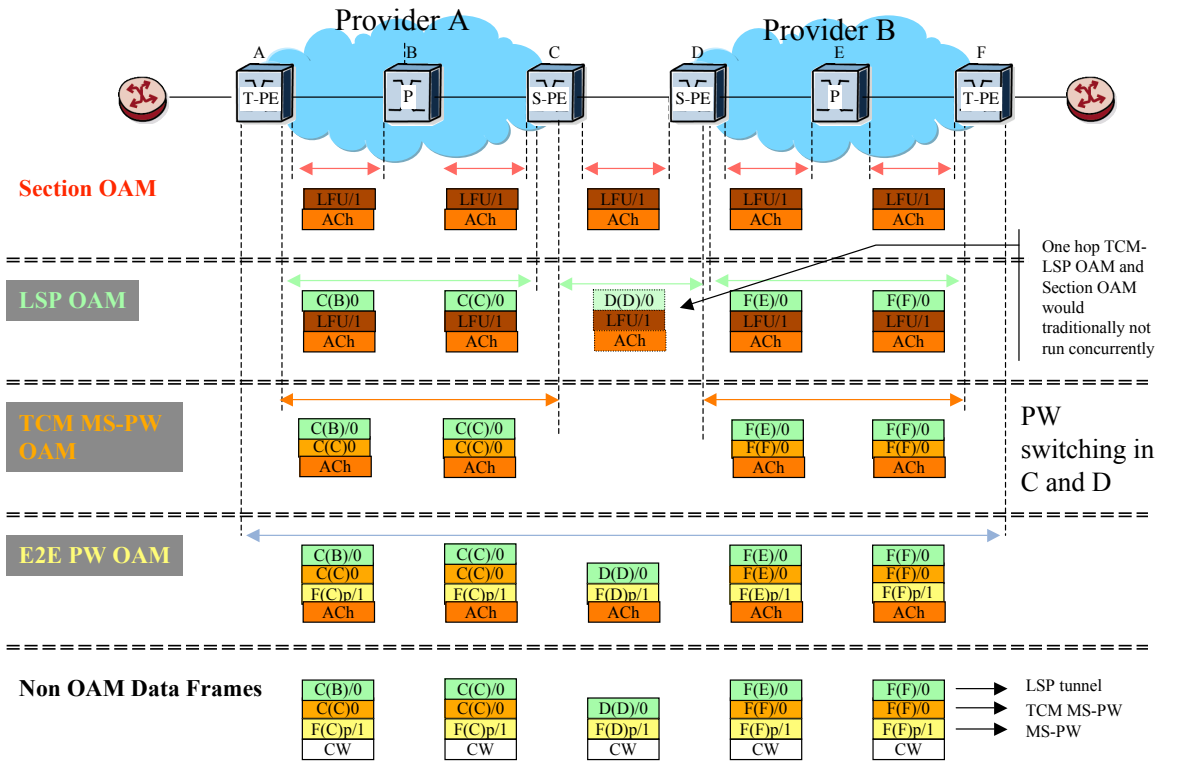

SS-PW over Intra-domain LSP

LSP MEP->MIP OAM using TTL

LFU – Label For You (label 13)
ACh – Associated Channel
CW – Control Word
T = TTL

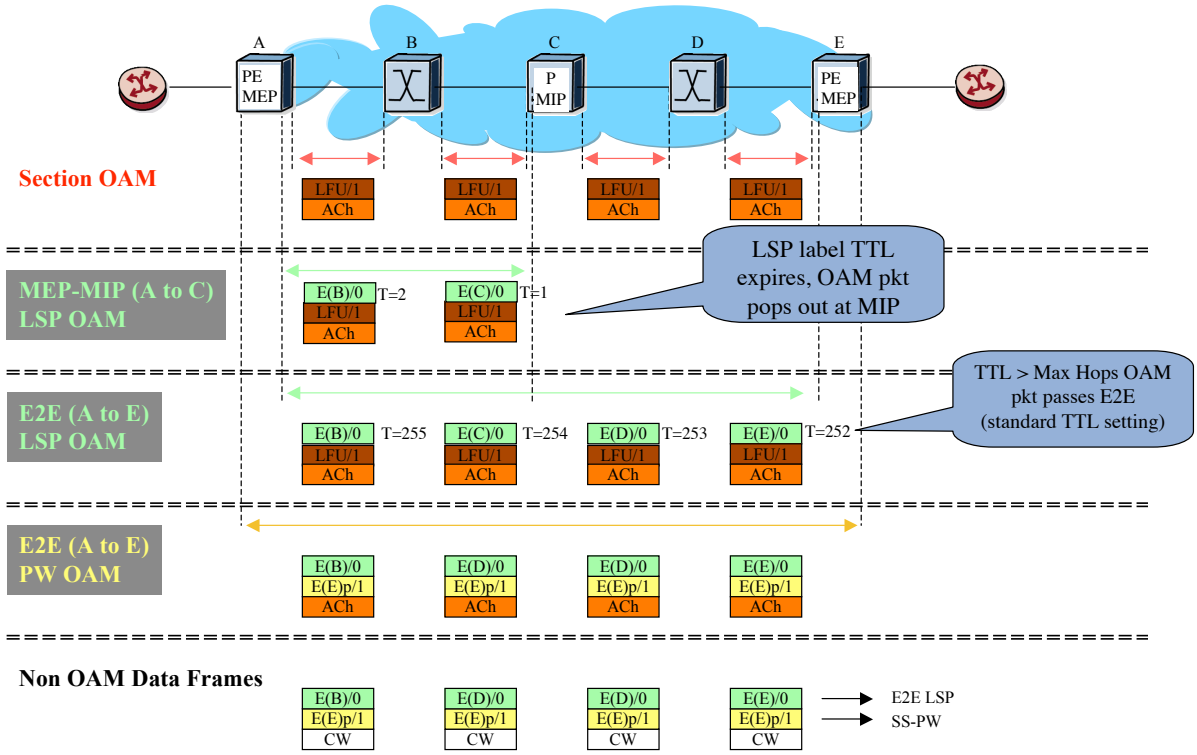

Intra-domain MS-PW

MS-PW MEP->MIP OAM using TTL *(No TCM)*

(See draft-ietf-pwe3-segmented-pw-)

LFU – Label For You (label 13)
ACh – Associated Channel
CW – Control Word
T = TTL

B,C and D are S-PEs
A, E are MEPs

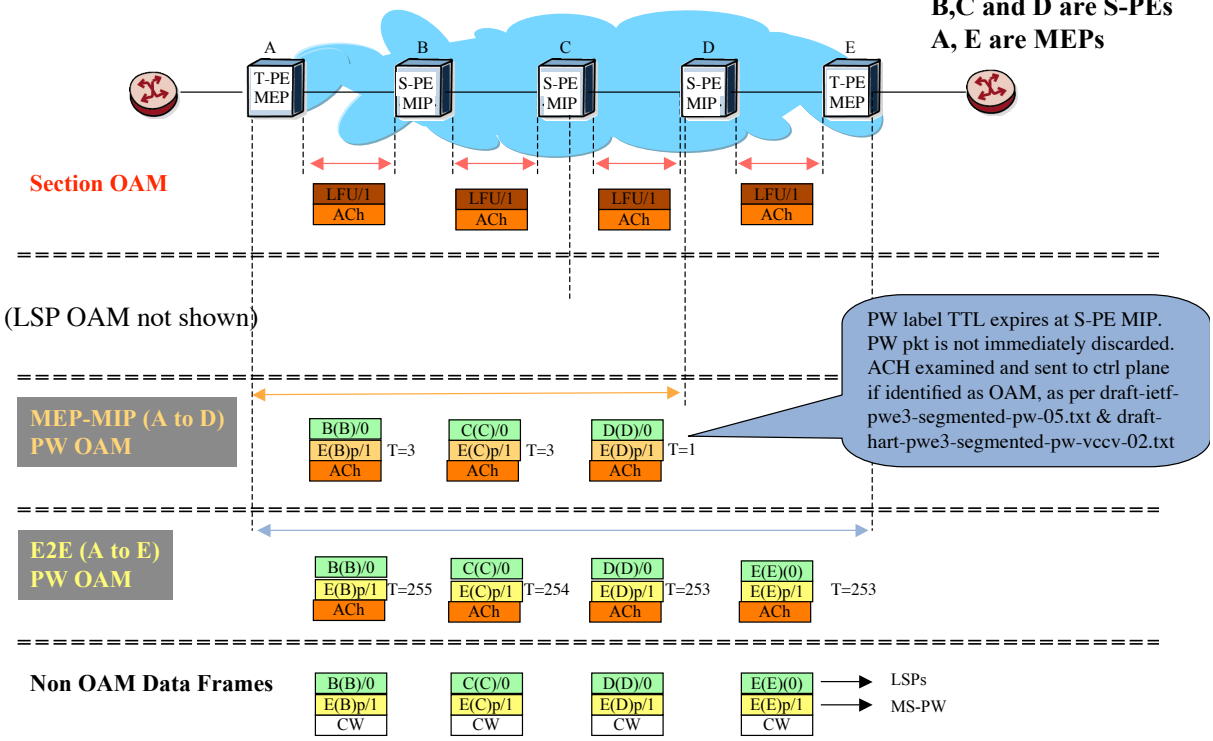

Intra-domain MS-PW

TCM-MS-PW MEP->MIP OAM using TTL

LFU – Label For You (label 13)
ACh – Associated Channel
CW – Control Word
T = TTL

B,C and D are S-PEs

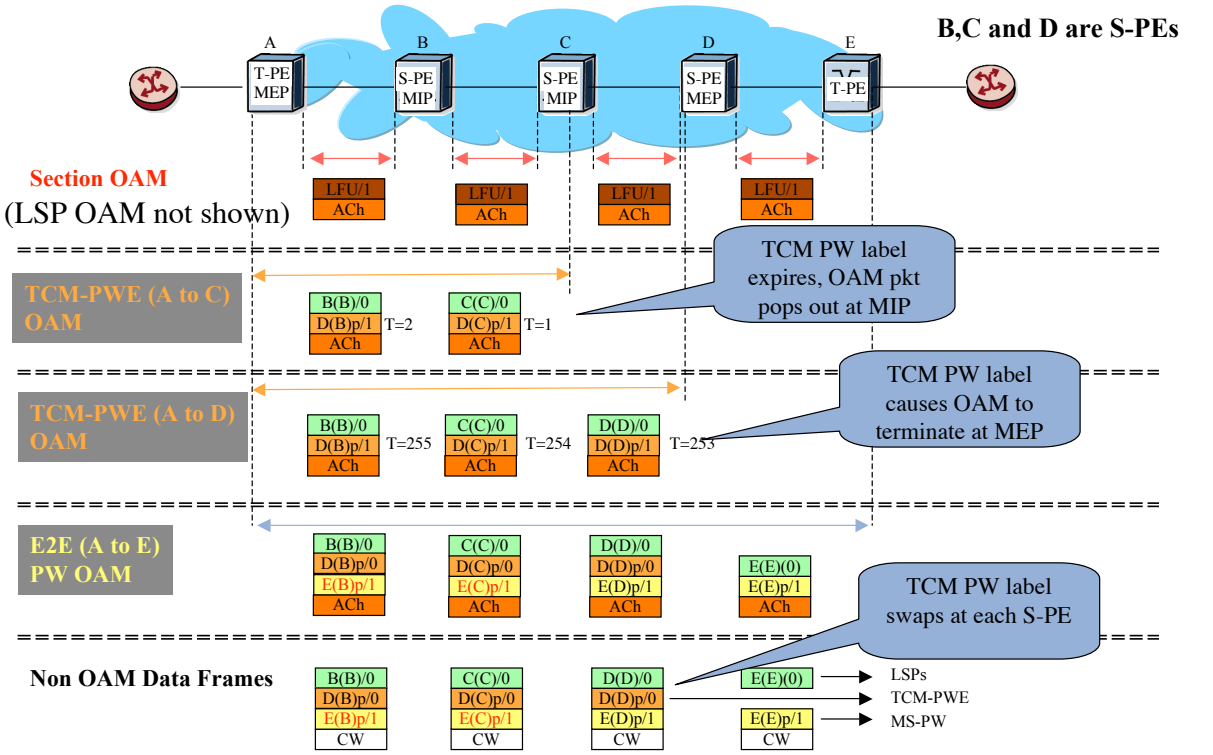

MEP to MIP OAM:
TTL Processing for PWs and LSPs

- In order to maintain individual levels of OAM and path detection

  Use pipe model per label level

  TTL is not copied up the stack on a push

  TTL is not copied down the stack on a pop

  TTL is decremented on each swap and pop action

  Traceroute for a level can be used to trap packets at each node that processes the label for that level in the label stack

  Scenarios to be added:

  a) LSP on FRR path (both facility and detour)

  b) b) PW with ACH processing (no need for LFU, so processing steps are slightly different from LSP processing)

Short Pipe Model with Nested TTL and No PHP Processing

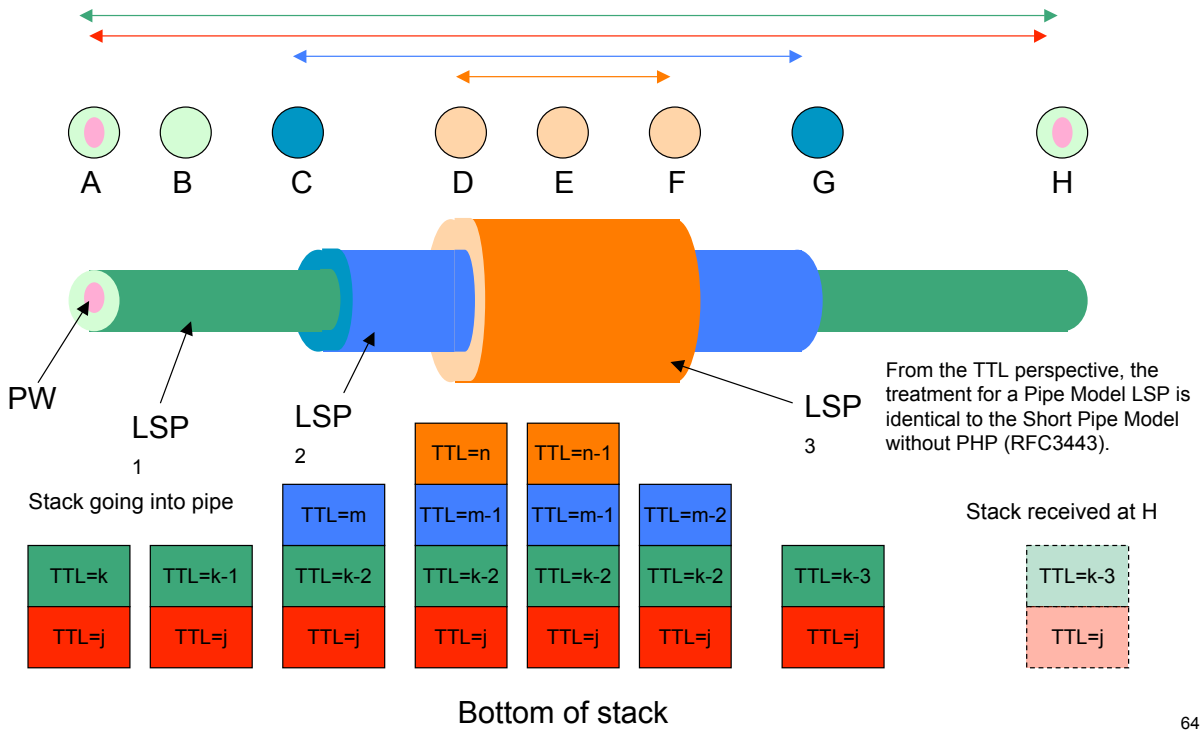

Nested LSP TTL Processing (1)

- The previous picture shows
  - PW: Pseudowire
  - LSP1: Level 1 LSP (PW is carried inside)
  - LSP2: Level 2 LSP (LSP1 is nested inside)
  - LSP3: Level 3 LSP (LSP2 is nested inside)
- TTL for each level is inserted by the ingress of the level
  - PW TTL is initialized to j at A
  - LSP1 TTL is initialized to k at A
  - LSP2 TTL is initialized to m at C
  - LSP3 TTL is initialized to n at D
- TTL for a particular level is decremented at each hop that looks at that level
  - PW TTL is decremented at H
  - LSP1 TTL is decremented at B, H
  - LSP2 TTL is decremented at G
  - LSP3 TTL is decremented at E, F

Nested LSP TTL Processing (2) - pseudo code

If a packet arrives at a node with TTL != 1, then the TTL is decremented

- If the LFIB action for this label is POP, then this node should be a MEP for this label level
  - If the packet has an LFU below the current label
    - The packet is passed to the control plane module for processing, including validating that the node is a MEP, the packet contents are consistent
    - The appropriate OAM actions, as described by the packet, are taken
    - A reply, if required, is returned to the MEP that originated this message
  - If the packet doesn't have an LFU below the current label
    - If the current label is not bottom of stack, continue processing label stack
    - If the current label is bottom of stack, forward the packet according to egress processing for this level

Nested LSP TTL Processing (3) continued pseudocode

If a packet arrives at a node with TTL = 1, then the TTL is decremented and goes to 0

- If the packet has no LFU below the current label, then the packet may be discarded
  - Statistics may be maintained for these packets
- If the packet has an LFU just below the current label
  - If the LFIB action for this label is POP, then this node should be a MEP for this level
    - The packet is passed to the control plane module for processing, including validating that the node is a MEP, the packet contents are consistent
    - The appropriate OAM actions, as described by the packet, are taken
    - A reply, if required, is returned to the MEP that originated this message
  - If the LFIB action for this label is SWAP, then this node should be a MIP for this level
    - The packet is passed to the control plane module for processing, including validating that the node is a MIP, the packet contents are consistent
    - The appropriate OAM actions, as described by the packet, are taken
    - A reply, if required, is returned to the MEP that originated this message

Multi-Segment PW TTL Processing

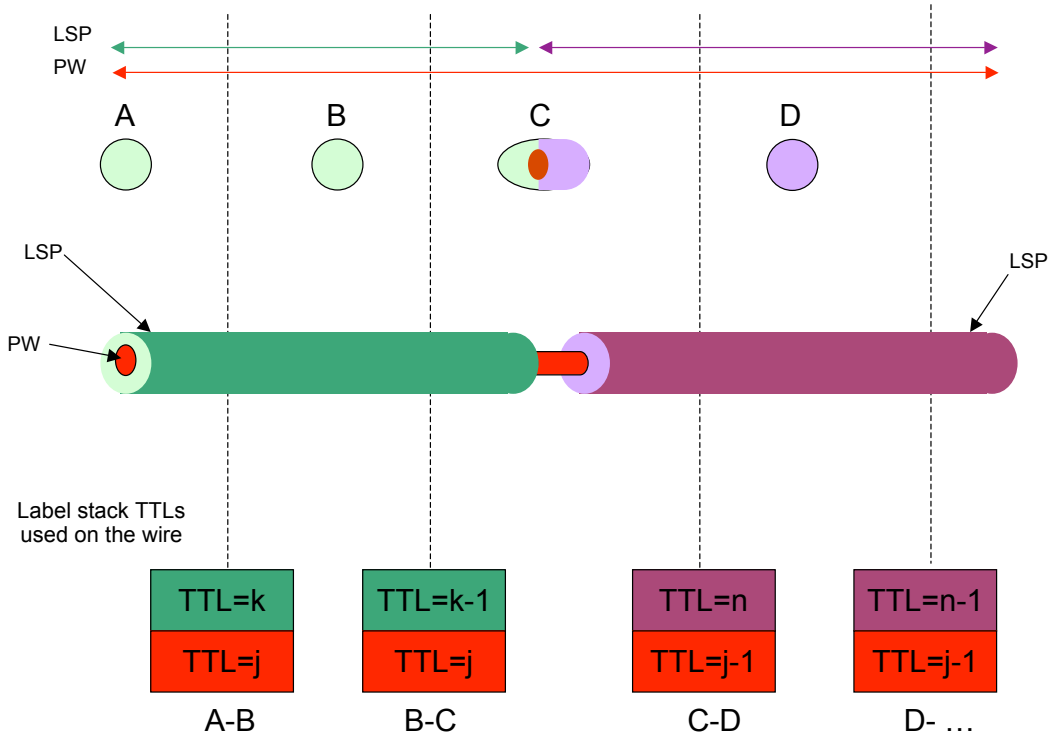

Cascaded LSP TTL Processing

- The previous picture shows
  - PW1: Pseudowire
  - LSP1: Level 1 LSP (PW1 is carried inside)
  - PW2: Pseudowire (PW1 is stitched to PW2)
  - LSP2: Level 1 LSP (PW2 is carried inside)
- TTL for each level is inserted by the ingress of the level
  - PW1 TTL is initialized to j at A
  - LSP1 TTL is initialized to k at A
  - PW2 TTL is initialized to m at C
  - LSP2 TTL is initialized to n at C

Is m = j-1?

- TTL for a particular level is decremented at each hop that looks at that level
  - PW1 TTL is decremented at C
  - LSP1 TTL is decremented at B, C
  - PW2 TTL is decremented at E
  - LSP2 TTL is decremented at D, E

ECMP Considerations

- OAM and Data MUST share fate.
- PW OAM fate shares with PW through the first nibble mechanism (RFC4928) and hence is fate shared over any MPLS PSN.
- Fate sharing is not assured for the MPLS Tunnel OAM/Data in the presence of ECMP.
- The current MPLS Transport Profile ensures OAM/Data fate sharing for the MPLS tunnel by excluding the use of MPLS ECMP paths (for example by only using RSVP or GMPLS signaled MPLS tunnels)
- There is a requirement to improve IETF MPLS OAM. This will require the problem of fate sharing in the presence of ECMP to be addressed.
- If the OAM/DATA fate sharing problem is solved for MPLS ECMP, then the Transport Profile may be extended to take advantage MPLS paths that employ ECMP.

RFC4928 Mechanism

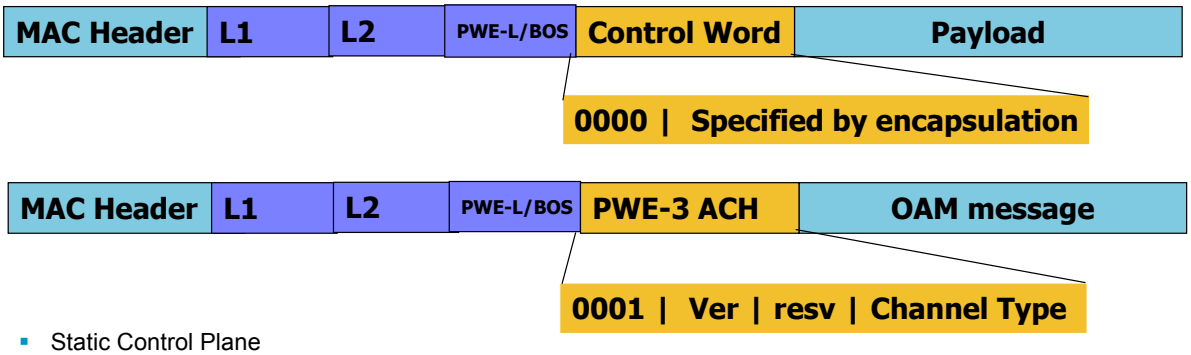

- Static Control Plane
  - Under the control of an external NMS therefore should not be an issue
  - Single discrete LSPs defined through static provisioning system
- Dynamic Control Plane environment
  - Routing protocols and LDP may set-up ECMP routes
  - Traffic Engineering can as well (auto-route)
- Recognized in IETF
  - RFC 4928 Avoiding Equal Cost Multipath Treatment in MPLS Networks : 0 or 1 in the first nibble of the payload
  - RFC 4385 PW3 Control Word for Use over an MPLS PSN : Defines “Generic PWE-3 control word” and “PW Associated Channel” formats
- A consistent approach required for MPLS with a transport profile
  - RFC 4928 implemented through use of control word and PWE-3 ACH
  - RFC 4385 for Control Word and PW associated Channel formats
  - NOTE: joint proposals to be made on “Load Balance” label technology in PWE3 WG

Segment LSP operations

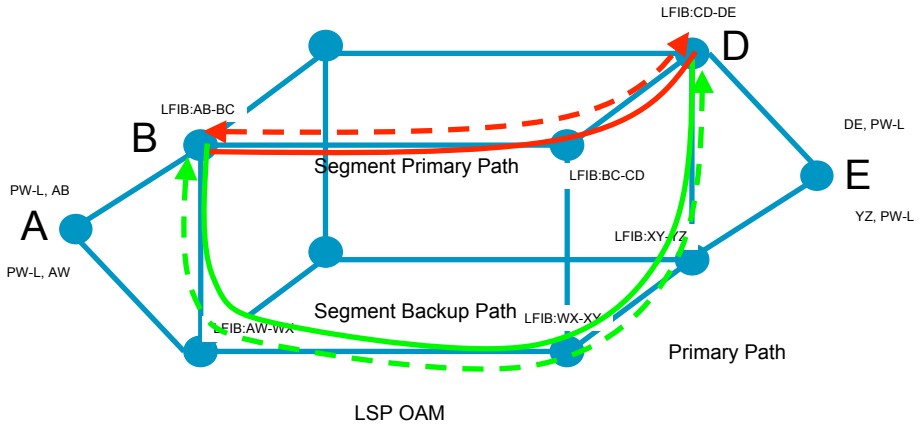

- Path diversity is not part of the OAM process. It is the responsibility of the Control or Management Plane
- OAM function uses LFU with Generic Channel Association
- Pre-provisioned segment primary and backup paths
- LSP OAM running on segment primary and back-up paths (using a nested LSP)
- OAM failure on backup path → Alert NMS
- OAM failure on primary path results in B and D updating LFIB to send traffic labelled for BD via segment backup path
- End to End traffic labelled for BD now pushed onto segment backup path

End to End LSP operations

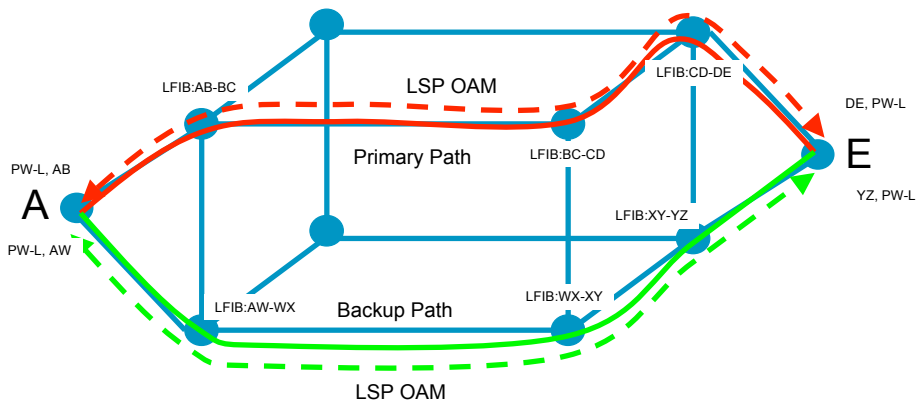

- Path diversity is not part of the OAM process. It is the responsibility of the Control Plane
- OAM function uses LFU with Generic Channel Association
- Pre-provisioned primary and backup paths
- LSP OAM running on primary and back-up paths
- OAM failure on backup path → Alert NMS
- OAM failure on primary path →A and E updating LFIB to send and receive PW-L traffic over backup path

PHP

- It is believed that PHP may be able to be used in the transport profile.
- The issue is how do we maintain the packet context for both the data and OAM

  described on the following 3 slides
- One scenario follows:

  SS-PW, LSP and TCM-LSP

Packet Context

- OAM operations require packet context.
- Work to date has proposed that this is supplied by the label value and hence precludes the use of PHP.
- Using the label as the identifier is a simple mechanism that can be applied to both OAM and data packets, but has a number of issues:
  - –Precludes PHP which has cost and applicability implications for the OAM
  - –Label errors may produce complex network issues
- Other context indicators may be available that allow the lifting of the PHP constraint (at least as an option).

Alternative Context Indication

- In the case of IP the IP address provides context
- In the case of PW, the PW label provides context
- In the case of an OAM pkt, an identifier can provide context
- The issue are:
  - OAM and data must fate share;
  - Need to provide context identification for performance monitoring of data packets, or the need to provide an alternative mechanism that provides satisfactory performance information.

Use of alternate context mechanisms

- The MPLS architecture supports label retention and hence we can proceed on the basis that this approach is available to the design team.
- There are costs to the prohibition of PHP that needs to be fully understood and accepted.
- During the design phase we need to:
  - Understand the costs, limitations, vulnerabilities and advantages of the PHP and non-PHP approaches
  - Either
    1. Confirm label as context identifier and hence confirm PHP restriction
    2. Propose an alternative mechanism that satisfies all needs and which permits PHP
    3. Propose the specification of a PHP and non-PHP method with appropriate applicability statements.

SS-PW, LSP and TCM-LSP OAM - PHP

LFU – Label For You (label 13|14)
ACh – Associated Channel
CW – Control Word

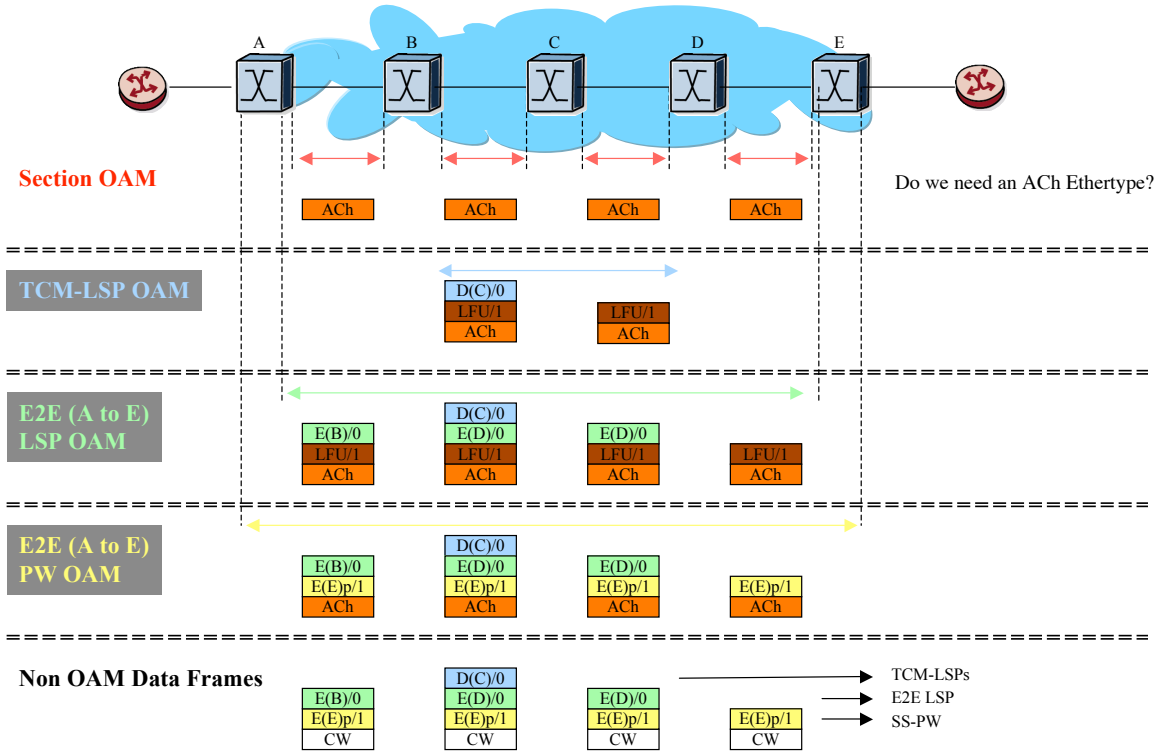

Control Plane

Conclusions/Recommendations

- Control plane sub-team sees ***no show-stoppers***
  - Existing IETF protocols can be used to provide required function
    - Transport network operation
    - DCN/SCN operation
  - IETF GMPLS protocols already applied to ASON architecture
  - Any protocol extensions needed will be easy to make
    - *Configuration of MEPs/MIPs and activation of monitoring*
    - *Support of bridge and roll capability*
      - *Allows Tandem connection monitoring to be added to an existing LSP without disruption to the service*

Discussion

- Transport profile should meet the requirements of the ASON architecture
  - Use IETF protocol suite given it is used for ASON
    - GMPLS RSVP-TE for LSP signaling
    - GMPLS OSPF-TE and ISIS-TE for LSP TE information distribution
    - LDP will be used for PW setup (as part of client set up process)
- DCN/SCN
  - IP-based DCN/SCN
  - ACH defines ECC
    - Can have as many channels and protocols as necessary and therefore could support the SCN
  - Must have policing for DCN/SCN
  - IS-IS or OSPF running in DCN to provide DCN topology information
- Connectivity discovery and verification
  - Could use LMP if native mechanisms not adequate

Control Plane View of Inter-provider MS-PW

AC – Attachment Circuit
NNI – Network-Network Interface
I-NNI – Internal NNI
E-NNI – External NNI
SCN – Signaling Communication Network
SCN-GW Gateway
T-LDP – Targeted LDP

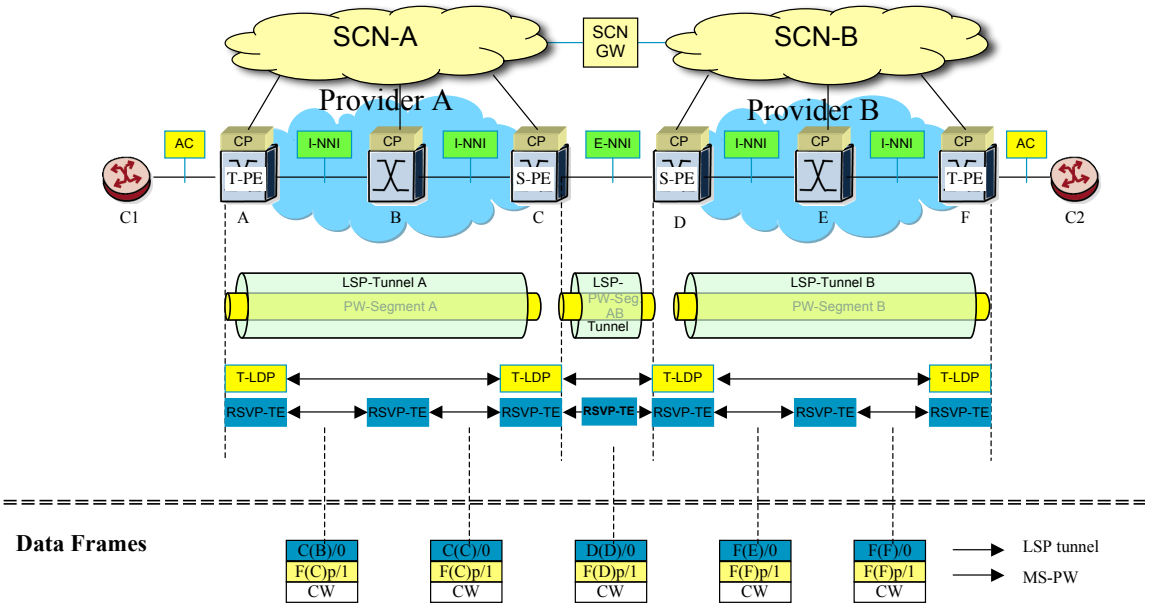

ASON Call/Connection Model

CCC – Client Call Controller
NCC – Network Call Controller
CC – Connection Controller
UNI – User-Network-Interface
NNI – Network-Network Interface
I-NNI – Internal NNI
E-NNI – External NNI

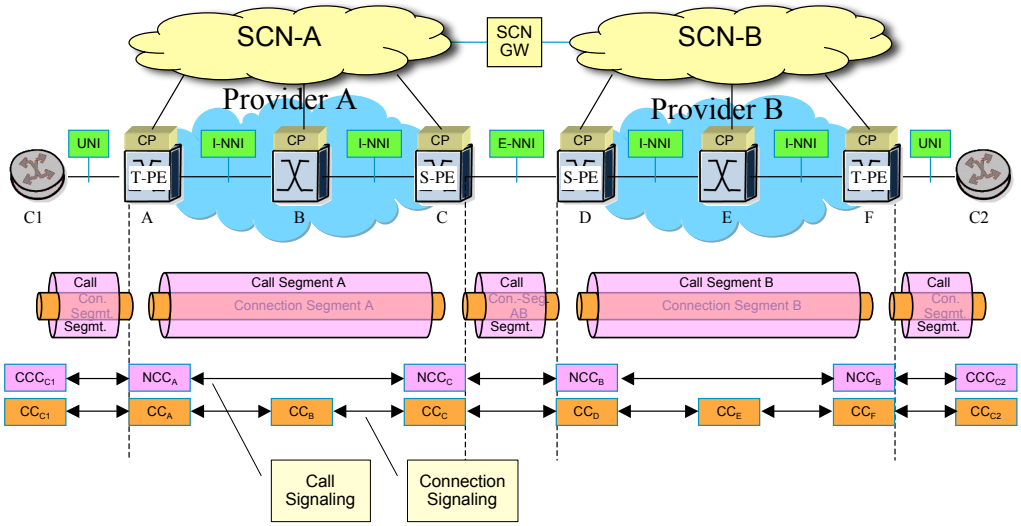

Survivability

Advice

- Survivability sub team has not found any issues that prevent the creation of an MPLS transport profile

  No showstoppers found

- Therefore option 1 can be selected
- Summary of discussion
  - Three potential solutions have been identified
  - Each solutions has different attributes and advantages
  - Further work in the design phase should eliminate one or more of these options and/or provide an applicability statement

Discussion

- Nested LSPs (potentially PWEs) provide levels of hierarchy to support per segment and path recovery

  Must draw up PWE requirements

- Most of the time intermediate nodes to not process the entire stack
- Each segment can act independently

  Multiple potential solutions including

  Native IETF mechanisms

  Carry G.8131/G.8132 PDUs in an ACH

Discussion - 2

- Native MPLS protection schemes, such as facility bypass and detours, can be used to provide ring protection in most, but not optimal in some scenarios
  - A single facility bypass LSP protects all LSPs over a specific link by wrapping traffic
  - A detour LSP can be used for optimal traffic delivery to the egress point (without wrapping)
    - A detour LSP is needed for every LSP to be protected.
  - Also can provide optimized exit preventing the 2x bandwidth in other wrapping repair technologies
  - Must add notion of DOWN and ADMINDOWN (e.g. standby bit)
- ITU-T G.8132 TM-SPRing defines a ring protection that includes additional capabilities to the MPLS protection schemes, by supporting coordinated protection in case of multiple failures (using single protection mechanism for all cases
- MPLS ring protection strategies provide necessary functionality and option 1 can be recommended but, there appears to be cases where G.8132 may provide additional functionality that may be incorporated and specified

We have found no showstoppers

Requirements summary - Rings

- MPLS-TP ring protection shall satisfy the following:
  - Less than 50 ms switching time
  - Protect p-t-p and p-t-mp connections
  - Support normal traffic and non-preemptable unprotected traffic
  - Provide hold-off timer and wait to-restore timer
  - Protect all traffic possible in case of single and multiple failures
    - Fiber, nodes or both
    - Failures that segment the ring
  - Support operator's commands
  - Support a priority scheme to arbitrate between switch requests from multiple faults and/or operator commands
    - Provide ability to coordinate multiple requests in the ring
  - Bi directional switching

- ITU-T References:

  ETSI TS 101 009, Section 6.2.2

  ITU-T G.841, Section 7.2.2

  Telcordia GR-1230, Section 5

  ITU-T Draft G.8132, Section 7

Requirements summary - Linear

- MPLS-TP linear protection shall satisfy the following:
  - Less than 50 ms switching time
  - Protect p-t-p and p-t-mp connections
    - P-2-MP LSP protection based on detours is covered in RFC 4875, though an example is not included here
  - Support normal traffic and non-preemptable unprotected traffic
  - Provide hold-off timer and wait to-restore timer
  - Support operator's commands
  - Support a priority scheme to arbitrate between switch requests from multiple faults and/or operator commands
  - Bi directional switching
  - Revertive and non revertive operation
- ITU-T References:
  - G.808.1 – Generic linear protection
  - G.8131 T-MPLS linear protection
- Not addressed

  Reuse (or simplify) the mechanism used for Ring protection?

Example Scenarios in the following slides

- Basic restoration in a ring
- MPLS protection scenarios
  - Facility Bypass
  - Restoration using detours
    - Sub-optimal
    - Optimized
- ITU-T G.8132 TM-SPRing protection overview
  - Label Allocation
  - OAM and APS messaging
  - P2P
  - P2MP
  - Multiple failures

MPLS Facility Bypass Example

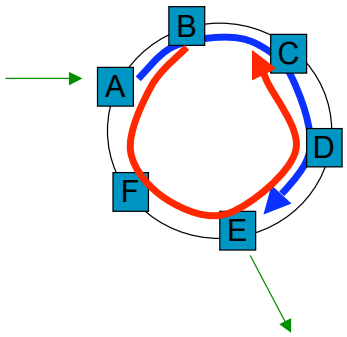

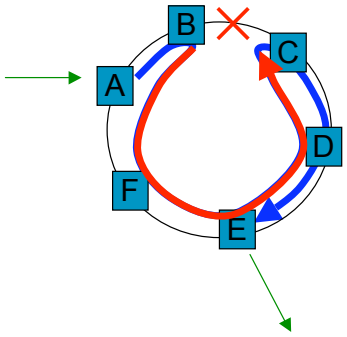

Example:

- Assume ingress to ring is at A and egress is at E
- Facility bypass (B-A-F-E-D-C) is established to protect link B-C
- Link B-C in the ring goes down
- Facility bypass protects failure of link B-C with the red path to the merge point (C)
- Emulates conventional optical ring failure recovery
- Requires two-label stack to redirect the LSP around the failure
- Scale issue:
  - One facility bypass provides protection for all LSPs over link B-C
  - One facility bypass for each link in the ring (shared by all LSPs on that link)

MPLS Facility Bypass Label Stack .1

Initial State, unidirectional LSP

AE = Initial clockwise ring
AE = bypass for **AE**

Spin is relative to initial LSP traffic flow

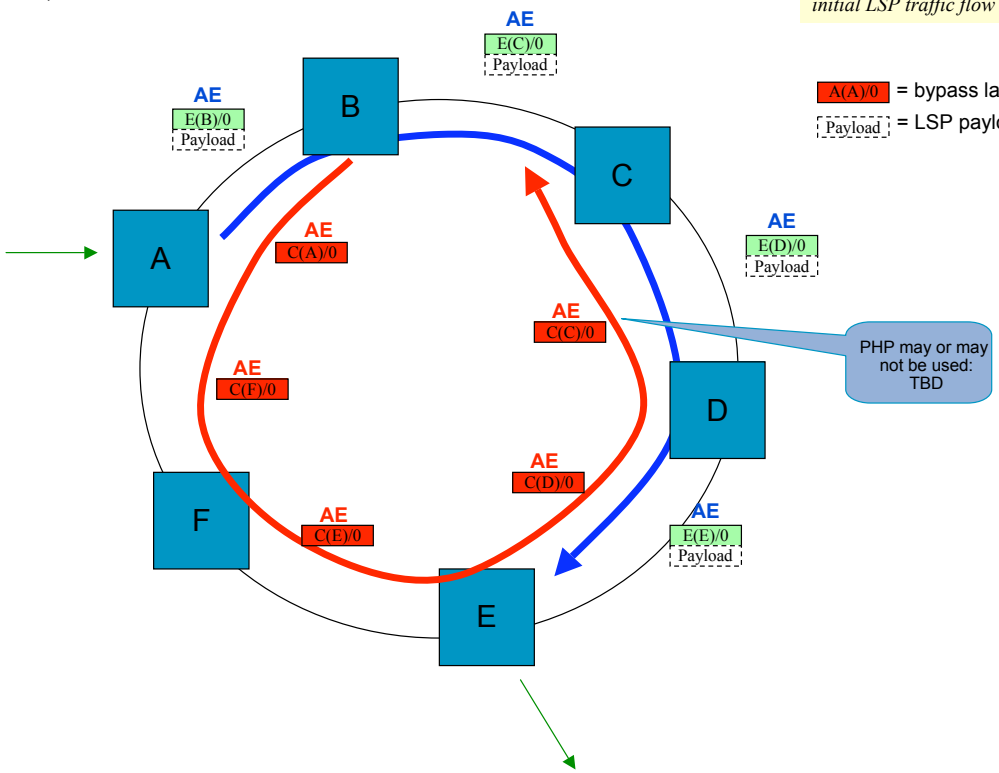

MPLS Facility Bypass Label Stack .2

Failure state, Unidirectional LSP

AE = Initial clockwise ring
AE = bypass for AE

Spin is relative to initial LSP traffic flow

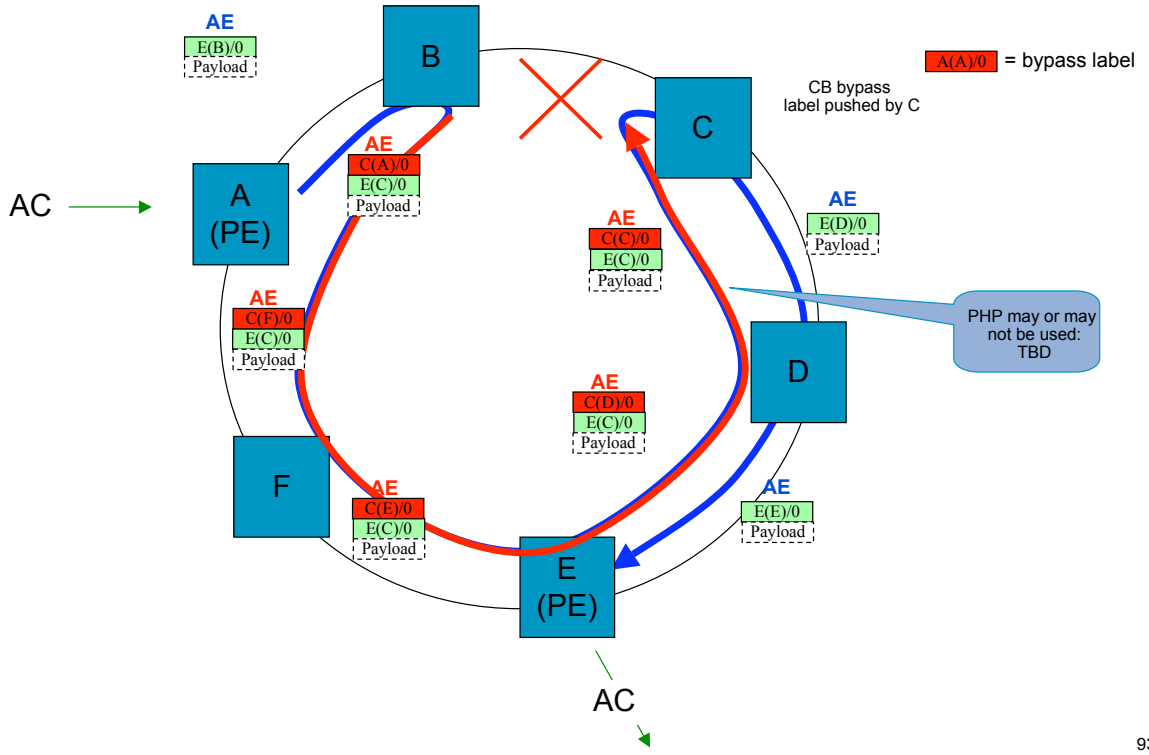

MPLS Facility Bypass Label Stack

Failure state, Bidirectional LSP

AE = Initial clockwise ring
EA = Initial anticlockwise ring
AE = bypass for AE
EA = bypass for EA
Spin is relative to initial LSP traffic flow

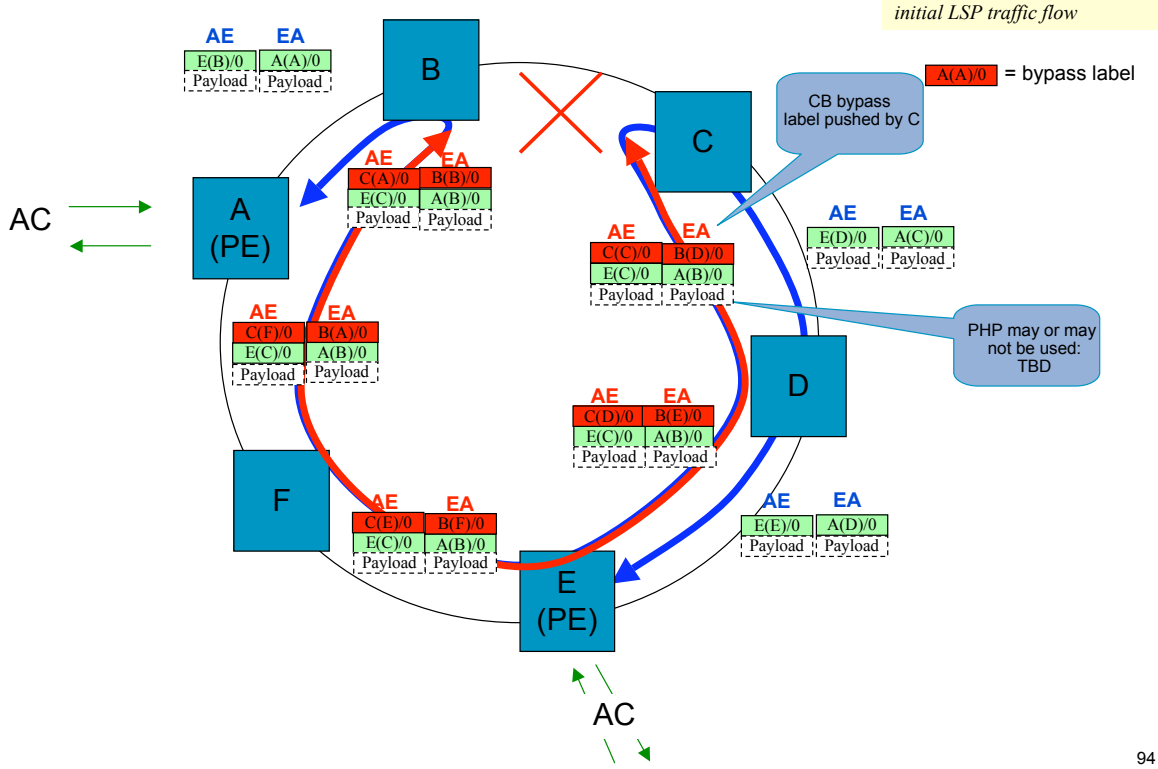

MPLS 1:1 Detours
- Optimized Restoration

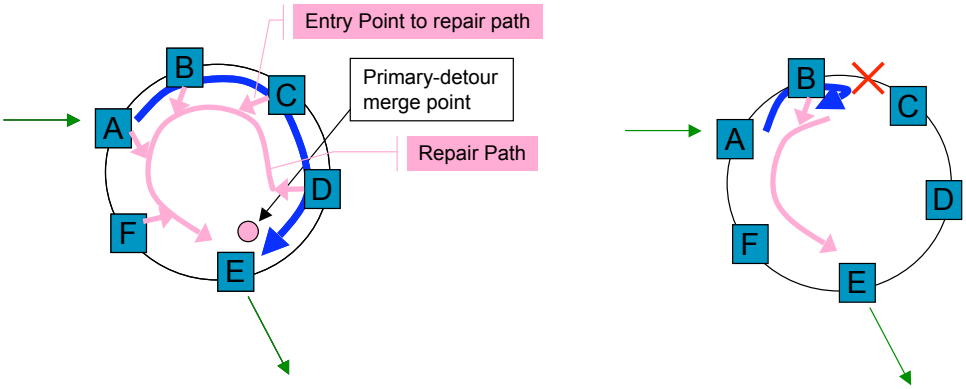

Example

- Assume ingress to ring is at A and egress is at E
- Detour established to protect link B-C merges with primary path at E, resulting in protection through B-A-F-E
- Link B-C in the ring goes down
- Detour carries traffic to E
- Optimizes on conventional optical ring and facility bypass failure recovery
- Requires one-label stack to redirect the LSP around the failure
- Scale issue:
  - One detour per LSP is required for each working LSP
  - The detour LSP can be used to protect the failure of any link on the ring

MPLS 1:1 Detours - Label Stacks .1
Initial state, Unidirectional LSP

AE = Initial clockwise ring
EA = Initial anticlockwise ring
AE = detour for **AE**
EA = bypass for **EA**
Spin is relative to initial LSP traffic flow

A(A)/0 = detour label

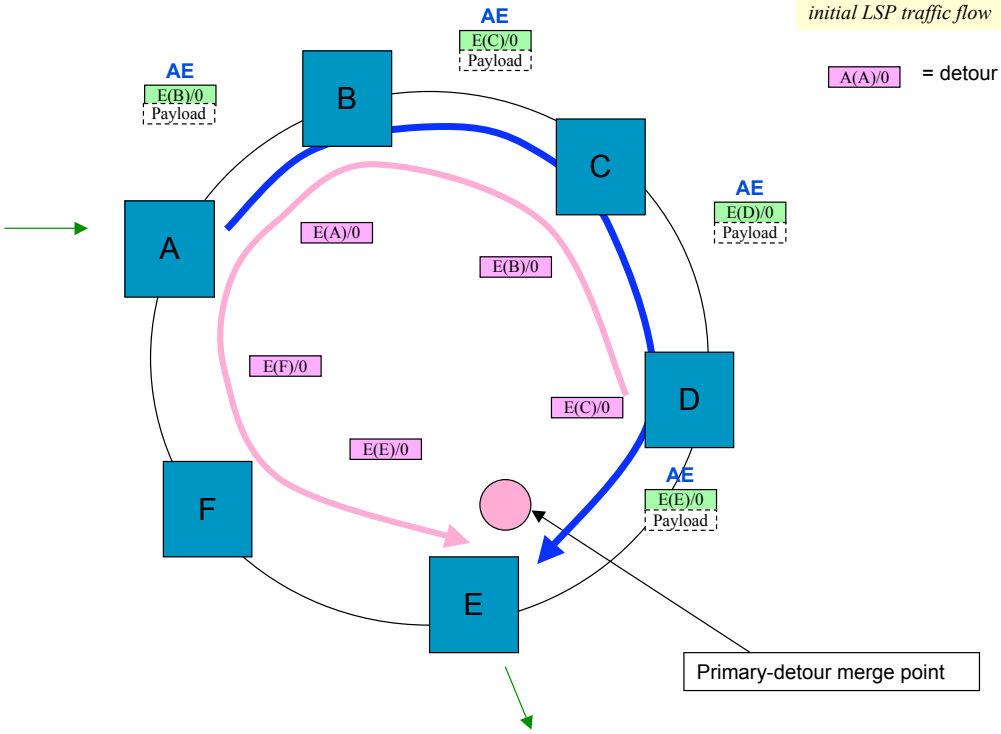

MPLS 1:1 Detours - Label Stacks .2
Failure state, Unidirectional LSP

AE = Clockwise ring
AE = bypass for **AE**

Spin is relative to initial LSP traffic flow

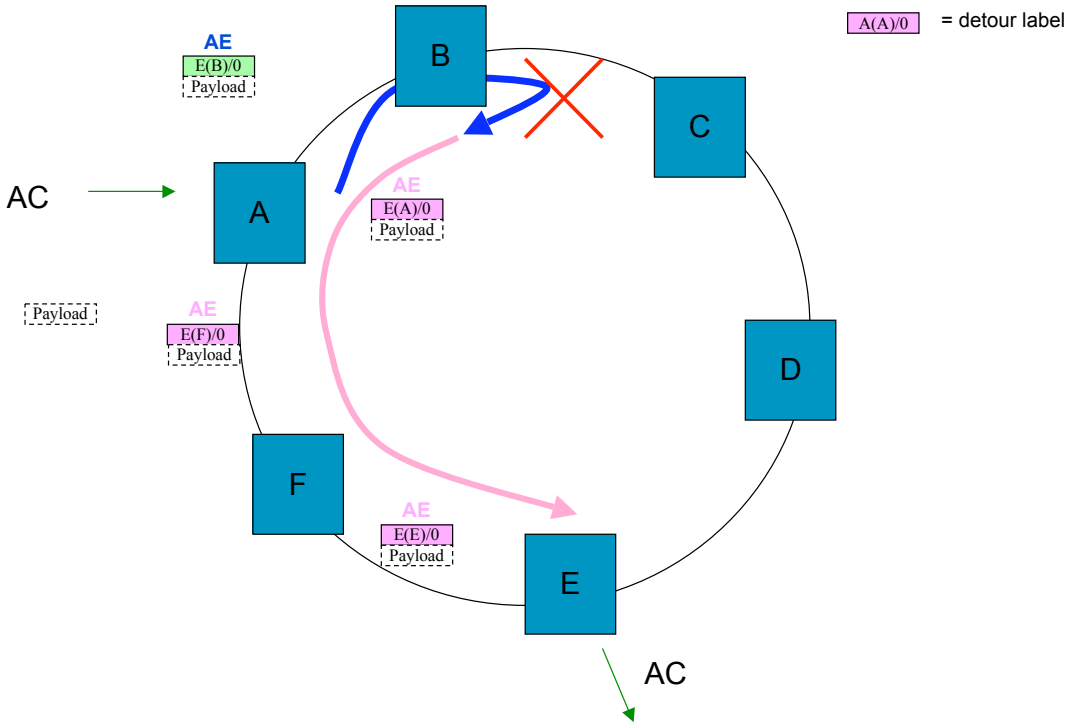

MPLS 1:1 Detours - Label Stacks
Failure state, Bidirectional LSP

AE = Clockwise ring
EA = Anticlockwise ring
EA = bypass for **AE**
AE = bypass for **EA**
Spin is relative to initial LSP traffic flow

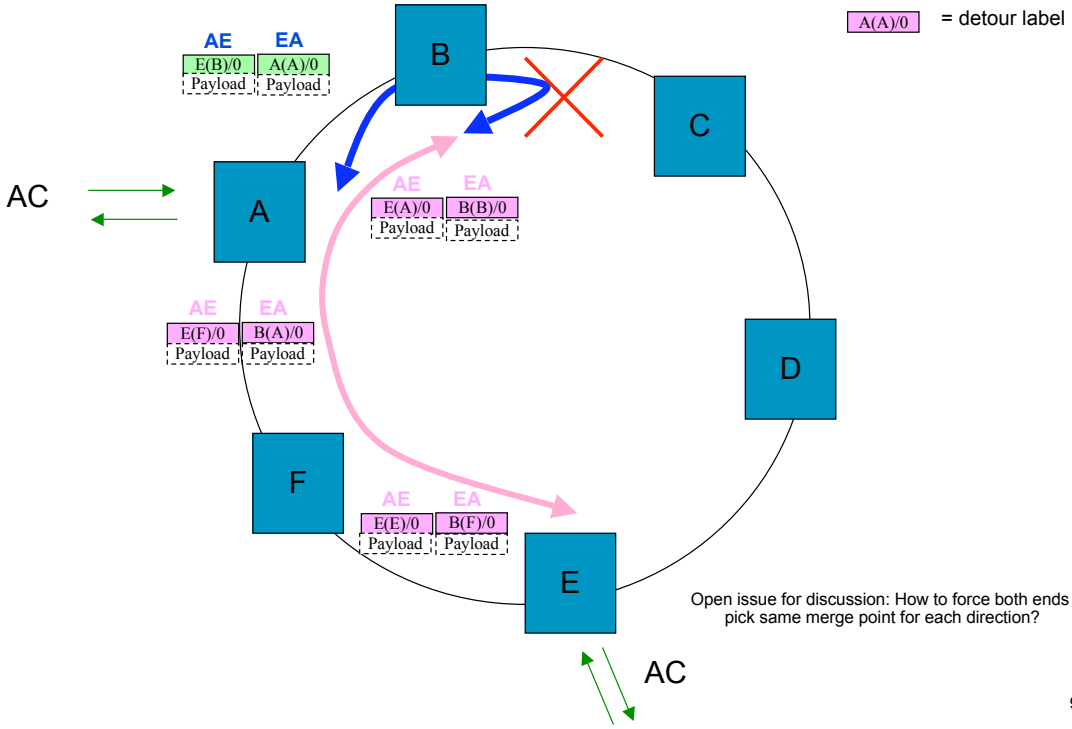

Open issue for discussion: How to force both ends pick same merge point for each direction?

Open questions on MPLS Facility bypass/detours

- ***No showstoppers*** but, to be solved in the design phase
  - *Loop avoidance*
  - *Implementation of bi-direction switching*
  - *Implementation of manual switching/operator requests*
  - *Implementation of switching priorities*
    - *Faults conditions, operator commands*
  - *Node configuration so that it is aware of the ring*
  - *Multiple failures*
    - *Ring segmentation*
  - *p2mp LSPs*

Review: TM-SPRing labels allocation

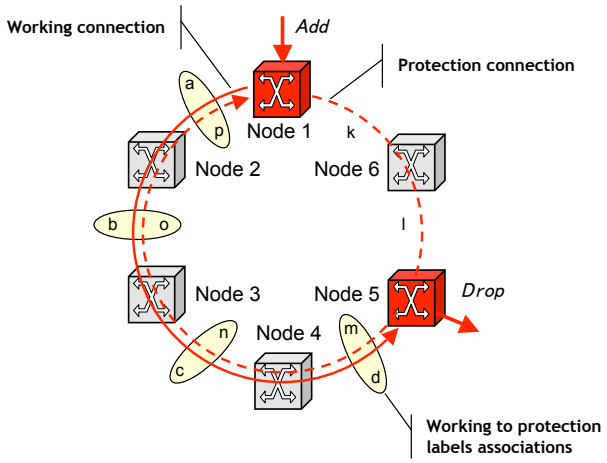

Labels allocation and association

Wk Labels	Pr Labels
a	p ↔ a
b	o ↔ b
c	n ↔ c
d	m ↔ d
	l ↔ nil
	k ↔ nil

Review: TM-SPRing OAM monitoring and APS messages

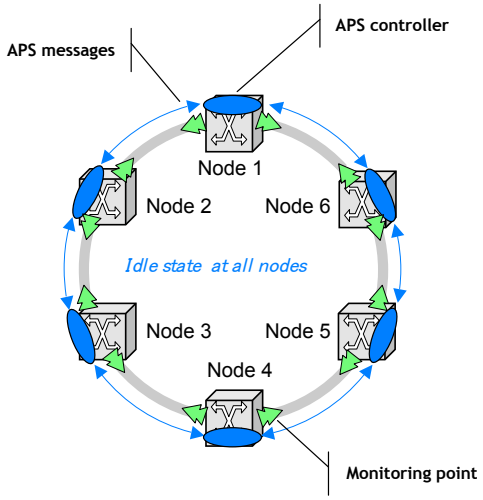

When there is no failure in the ring:
- All nodes are in the idle state
- All nodes generate and terminate APS NR PDUs to their neighbours

- Monitoring:
  - Each section (span) in the ring is monitored by sending CV OAM with periodicity of 3.3ms
  - Span failures are detected as absence of 3 consecutive CV frames
- APS:
  - Each node has an APS controller that sends and receives APS PDUs using an ACH
  - In normal state APS controller generates NR (no request) PDUs to its neighbours in both directions
  - When there is no failure each node in the ring is in the Idle state i.e. frames are not forwarded on the protection LSP

TM-SPRing point-to-point example

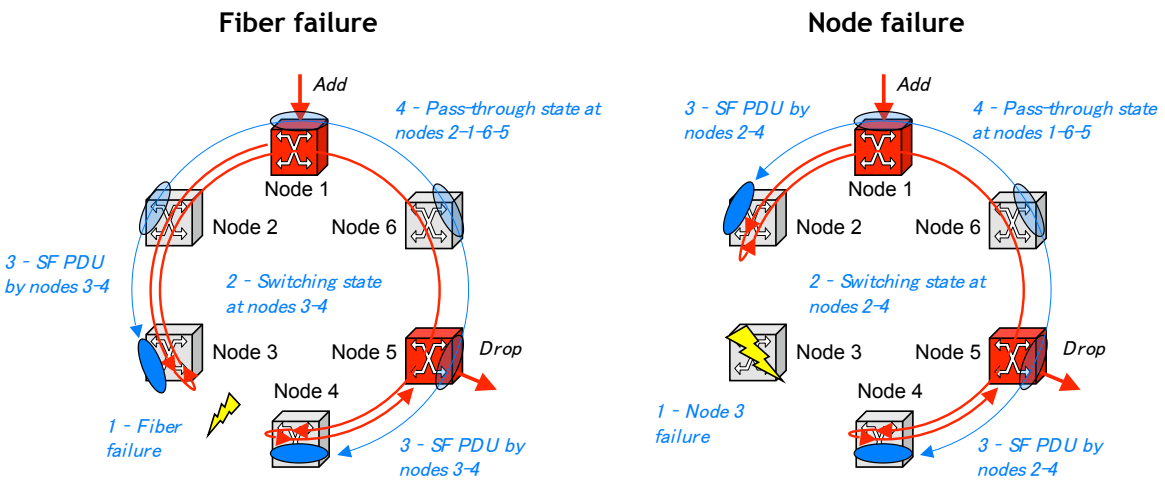

When failure occurs:
- The nodes adjacent to the failure enter the switching state and sends APS SF PDUs to neighbors
- When the other nodes in the ring receive the SF PDU they enter pass-through state (i.e. allow forwarding on the protection LSP) and forward the APS PDUs without modification

TM-SPRing point-to-multipoint example

Fiber failure

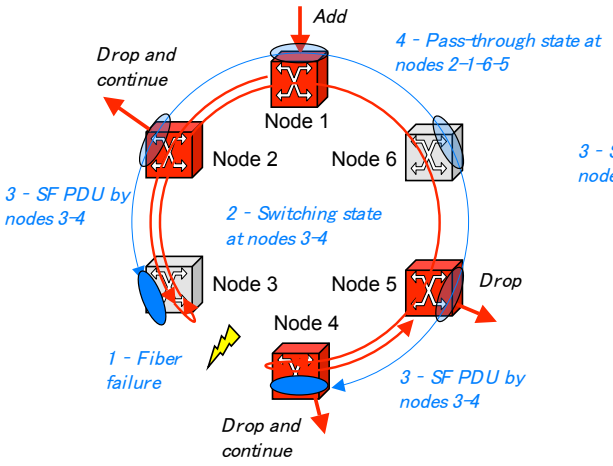

Node failure

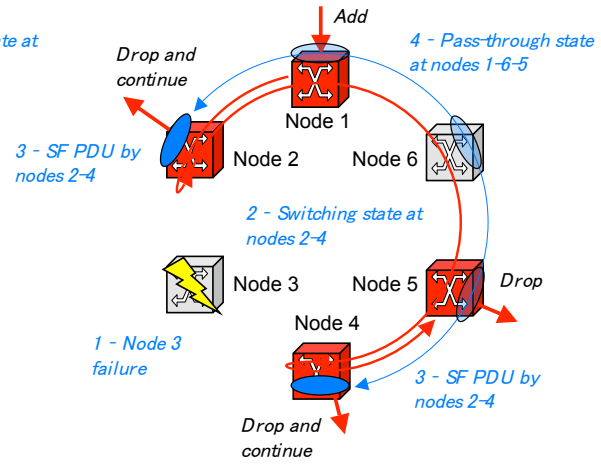

The same mechanism:

- *For p-t-p and p-t-mp connections*
- *For fiber or node failure*
- *For single or multiple failures*

TM-SPRing multiple failures example

Multiple failures, p-t-p

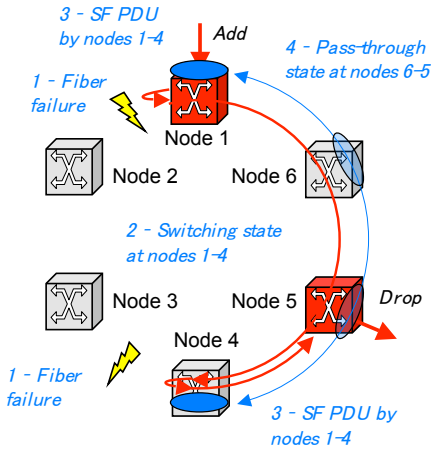

Multiple failures, p-t-mp

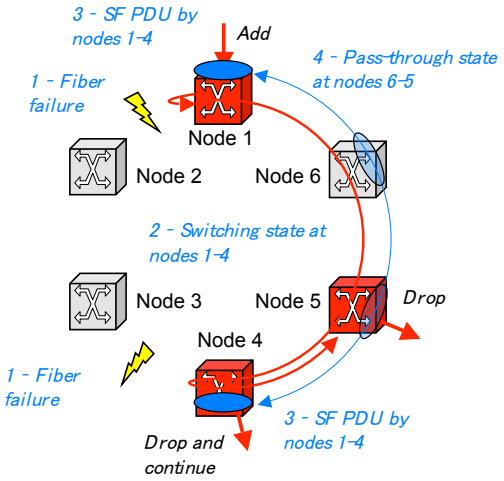

The same mechanism with a single protection connection restores all traffic possible:

- For p-t-p and p-t-mp connections
- For fiber or node failure
- For single or multiple failures

Network Management

Advice

- Network Management sub team has not found any issues that prevent the creation of an MPLS transport profile
- Therefore option 1 can be selected

No Showstoppers found

Conclusions - I

- Need to be able to provision and manage a LSP or PW across a network where some segments are managed by IETF (e.g. netconf) and other segments that are managed by ITU/TMF (XML/CORBA) interfaces.
  - LSP establishment
    - MPLS management in the IETF already supports the ability to independently setup LSP segments (using different tools) to create a concatenated (end to end) LSP
  - LSP maintenance
    - It is possible to run maintenance on an LSP independent of the mechanism used to establish the LSP
  - The ITU/TMF interface supports the management of multiple technologies
    - Management of MPLS-TP needs to be added to these multi technology interfaces
- No need to explicitly support the case of a single NE that offers both the IETF and ITU/TMF interface
  - This is a NE implementation issue

Conclusions - 2

- Network Management (NM) requirements
  - Configuration
    - No issues
  - Fault, PM
    - If the OAM can provide the measurement primitives then no reason that NM cannot report them
    - Need to allow each operator to determine the performance of the segment (plus end to end).
  - Accounting
    - Limited functionality – e.g. reporting of unavailable time, providing PM data
  - Security (of the management interface)
    - Not specific to MPLS-TP networks
    - Dependent on:
      - Management protocol
      - Management application
      - Bearer for the management traffic
    - Security implementation is per network segment

Management – Background IETF

- IETF architecture is layered and the functionality is allocated in separate processes, e.g.:
  - Performance management
    - Netflow/IPfix
      - Sample packets with a defined label – allows inspection of contents
    - SNMP MIBs (e.g. packet counts on LSPs, Octets on an LSP, Queue drops, CRC errors from lower layers – LSP not identified)
  - Fault management
    - SNMP traps,informs, BFD and syslog
  - Configuration management
    - Netconf, SNMP
  - Security
    - IPsec, tls, eap, Radius etc
  - Accounting
    - TACACS, netflow, ippm, ppml
- IETF doesn't use TMF style CORBA/XML interfaces

Management – Background ITU

- TMF/ITU approach
  - Provides both a NE and Network level interface to the OSS
  - Protocol neutral model (in UML), requirements and use cases
  - Protocol specific interface definitions

ITU-T PM objectives

- PM Requirements for a MPLS-TP LSP/PW
- Same measurements and processing as Ethernet
  - Connectivity defects present in a 1-second period
  - number of lost (circuit/packet) frames in a 1-second period
  - near-end and far-end (severely) errored second
  - 10 seconds being severely errored/not severely errored to enter/exit unavailable time (UAT)
  - 15min and 24hr PM parameter reporting
- To define how LM (loss measurement) and DM (delay measurement) information, as defined in Y.1731 & draft G.8114, is registered in 15min/24hr bins (G.7710)

Dependent on OAM providing the primitives to make these measurements

Summary

Summary

To date we have found no showstoppers and everyone is in agreement that we have a viable solution

Recommend Option 1

It is technically feasible that the existing MPLS architecture can be extended to meet the requirements of a Transport profile

The architecture allows for a single OAM technology for LSPs, PWE and a deeply nested network

From probing various SGs, WGs it appears that label 14 has had wide enough implementation and deployment that the solution may have to use a different reserved label (e.g. Label 13)

Extensions to Label 14 should cease

This architecture also appears to subsume Y.1711 since the requirements can be met by the mechanism proposed here

Some open discussion points

1. One way delay measurement techniques need to be defined although not required for initial design

   Decision: architecture can not preclude a solution for one-way delay measurement

   No issues w/ 2-way delay

2. Measurement of packet loss to support PMs and detection of degraded performance need to be defined

   One approach is to encapsulate the appropriate Y.1731 pdus in an ACH

The End

13. Informative References

[Ethertypes] IESG and IAB, "T-MPLS use of the MPLS Ethertypes", 2006, <https://datatracker.ietf.org/documents/LIAISON/file470.txt>.

[JWTcreation] Chairman, ITU-T SG 15, "Proposal to establish an Ad Hoc group on T-MPLS", 2008, <http://www.itu.int/md/T05-SG15-080211-TD-PLEN-0515/en>.

[LIAISON] Liaison statements to and from the IETF can be found at: <https://datatracker.ietf.org/liaison/>.

[MPLS-TP] "IETF and ITU-T cooperation on extensions to MPLS for transport network functionality", May 2008, <https://datatracker.ietf.org/liaison/446/>.

[MPLS-TP-22] IETF - ITU-T Joint Working Team, "MPLS Architectural Considerations for a Transport Profile", April 2008, <http://www.ietf.org/MPLS-TP_overview-22.pdf>.

[MPLS-TP1] "IETF and ITU-T cooperation on extensions to MPLS for transport network functionality", ITU-T SG15, May 2008, <https://datatracker.ietf.org/documents/LIAISON/file553.pdf>.

[RFC4929] Andersson, L. and A. Farrel, "Change Process for Multiprotocol Label Switching (MPLS) and Generalized MPLS (GMPLS) Protocols and Procedures", BCP 129, RFC 4929, June 2007.

[Stuttgart] IETF - IESG and IAB Chairs, "Report of interim meeting of Q.12 on T-MPLS", Stuttgart, Germany, Annex 4, 12-14 September 2007, 2008, <http://ties.itu.int/u//tsg15/sg15/xchange/wp3/200709_joint_q12_q14_stuttgart/T-MPLS/wdt03_rapporteur_report-final.doc>. This document is available on request from the ITU-T.

[ahtmpls] "Ad Hoc group on T-MPLS", 2008, <http://www.itu.int/ITU-T/studygroups/com15/ahtmpls.html>.

Editors' Addresses

Stewart Bryant (editor)
Cisco Systems
250, Longwater, Green Park,
Reading RG2 6GB
UK

EMail: stbryant@cisco.com

Loa Andersson (editor)
Acreo AB
Isafjordsgatan 22
Kista,
Sweden

EMail: loa@pi.nu